Chapter 12 The Bipolar Transistor

The Bipolar Transistor

- **Active device:** The transistor is a multijunction semiconductor device that, in conjunction with other circuit elements, is capable of current gain, voltage gain, and signal power gain.
- **The basic transistor action:** the control of current at one terminal by the voltage applied across the other two terminals of the device.

12.1 The bipolar transistor action

12.2 Minority carrier distribution

12.3 Transistor currents and low-frequency common-base current gain

The Bipolar Transistor

- Discuss the physical structure of the bipolar transistor, which has three separately doped regions and two pn junctions that are suffi ciently close together so interactions occur between the two junctions.
- Discuss the basic principle of operation of the bipolar transistor, including the various possible modes of operation.
- Derive expressions for the minority carrier concentrations through the device for various operating modes.
- Derive expressions for the various current components in the bipolar transistor.
- Define common-base and common-emitter current gains.
- Define the limiting factors and derive expressions for the current gain.
- Discuss several nonideal effects in bipolar transistors, including base width modulation (early effect), current crowding, and high-level injection effects.
- Develop the small-signal equivalent circuit of the bipolar transistor. This circuit is used to relate small-signal currents and voltages in analog circuits.
- Defi ne and derive expressions for the frequency limiting factors.
- Present the geometries and characteristics of a few specialized bipolar transistor designs.

12.1 The Bipolar Transistor Action

Structure： **Three separately doped regions and two pn junctions.**

- Emitter, base and collector.
- The width of the base region is small compared to the minority carrier diffusion length.
- The emitter region has the largest doping concentration; the collector region has the smallest.

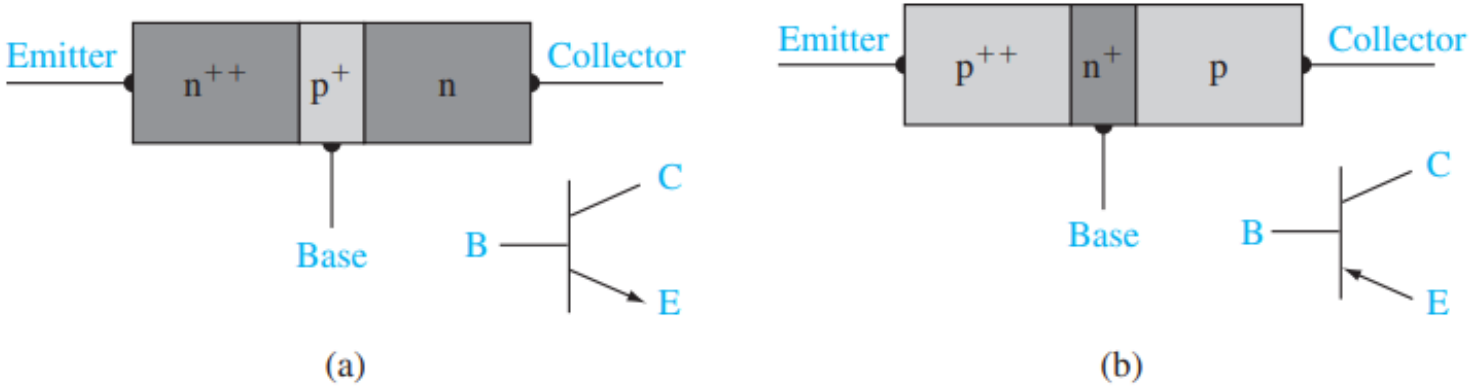

Simplified block diagrams and circuit symbols of (a) npn and (b) pnp bipolar transistors.

12.1 The Bipolar Transistor Action

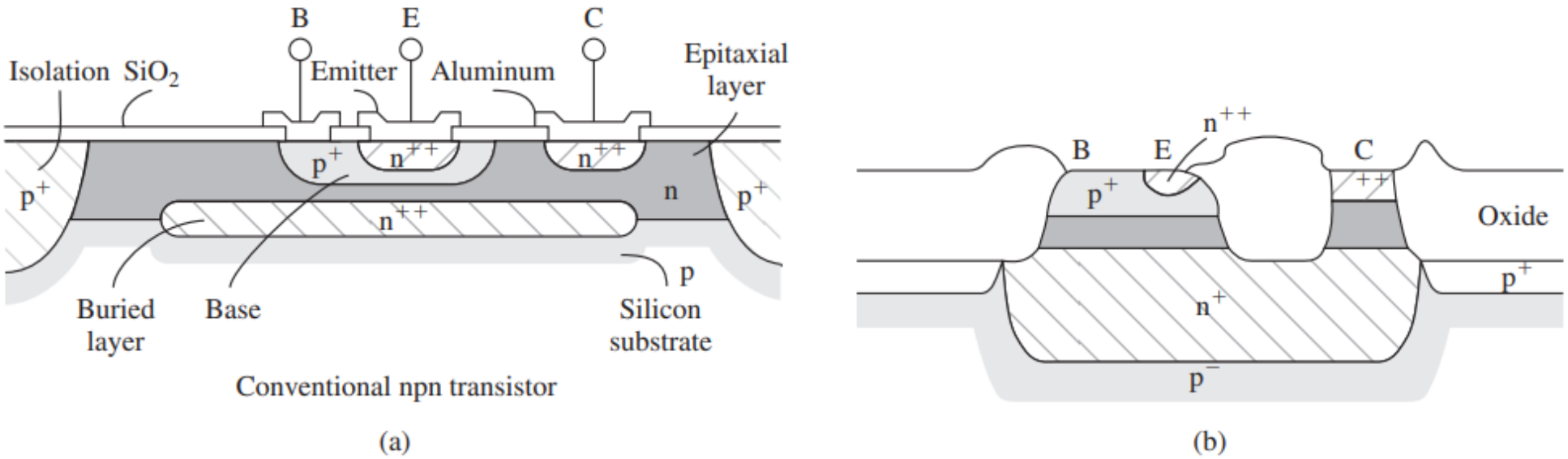

Cross section of (a) a conventional integrated circuit npn bipolar transistor and (b) an oxide-isolated npn biplar transistor

- The terminal connections are made at the surface, in order to minimize semiconductor resistances, heavily doped n^+ buried layers must be included.
- Individual transistors must be isolated from each.
- The bipolar Transistor is not a symmetrical device.

12.1.1 The Basic Principle of Operation

Forward-active operating mode:

The base-emitter**(B-E):forward biased**

The base-collector**(B-C):reverse biased**

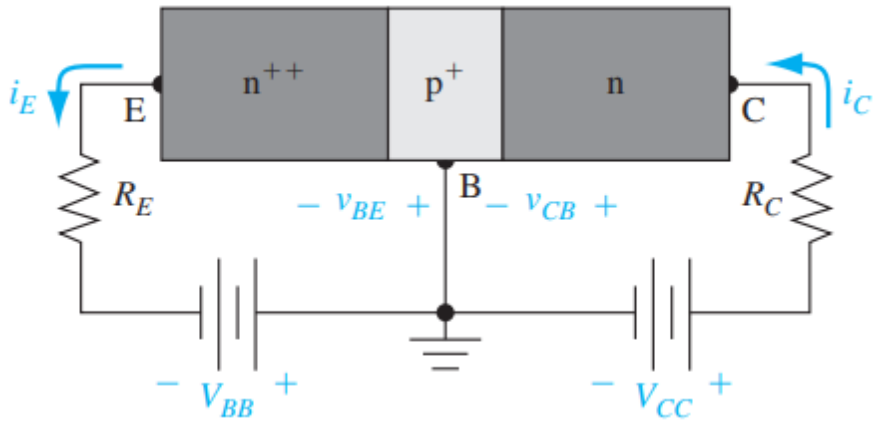

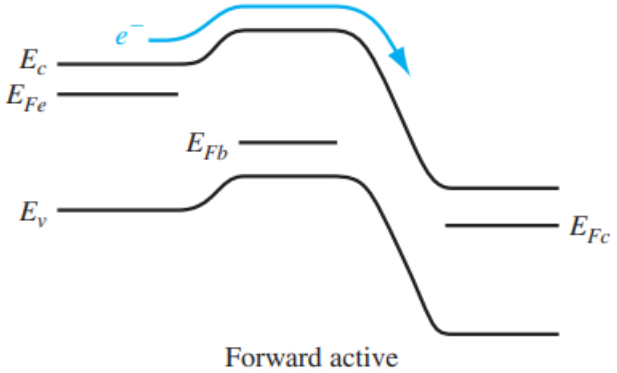

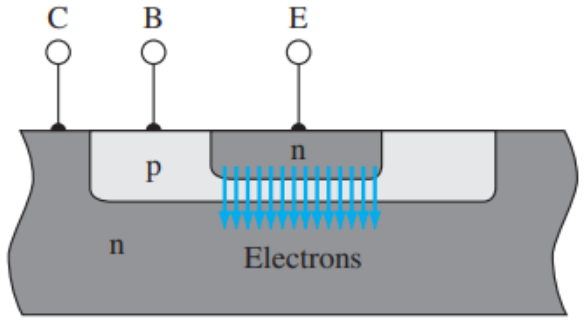

Minority carrier :

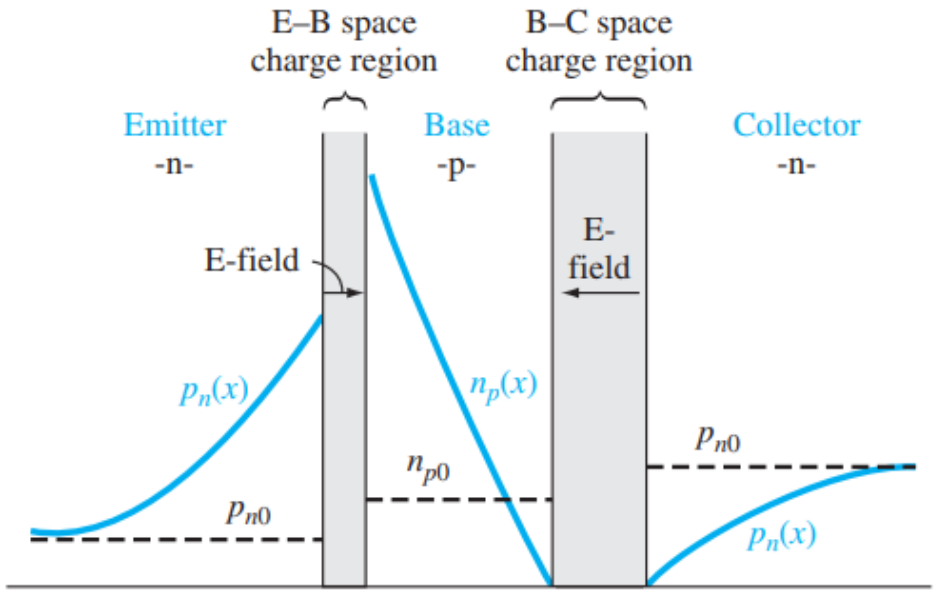

Emitter: the injection of the electrons from the n-type emitter

Collector: the collection of the electrons

12.1.2 Simplified Transistor Current Relation-Qualitative Discussion

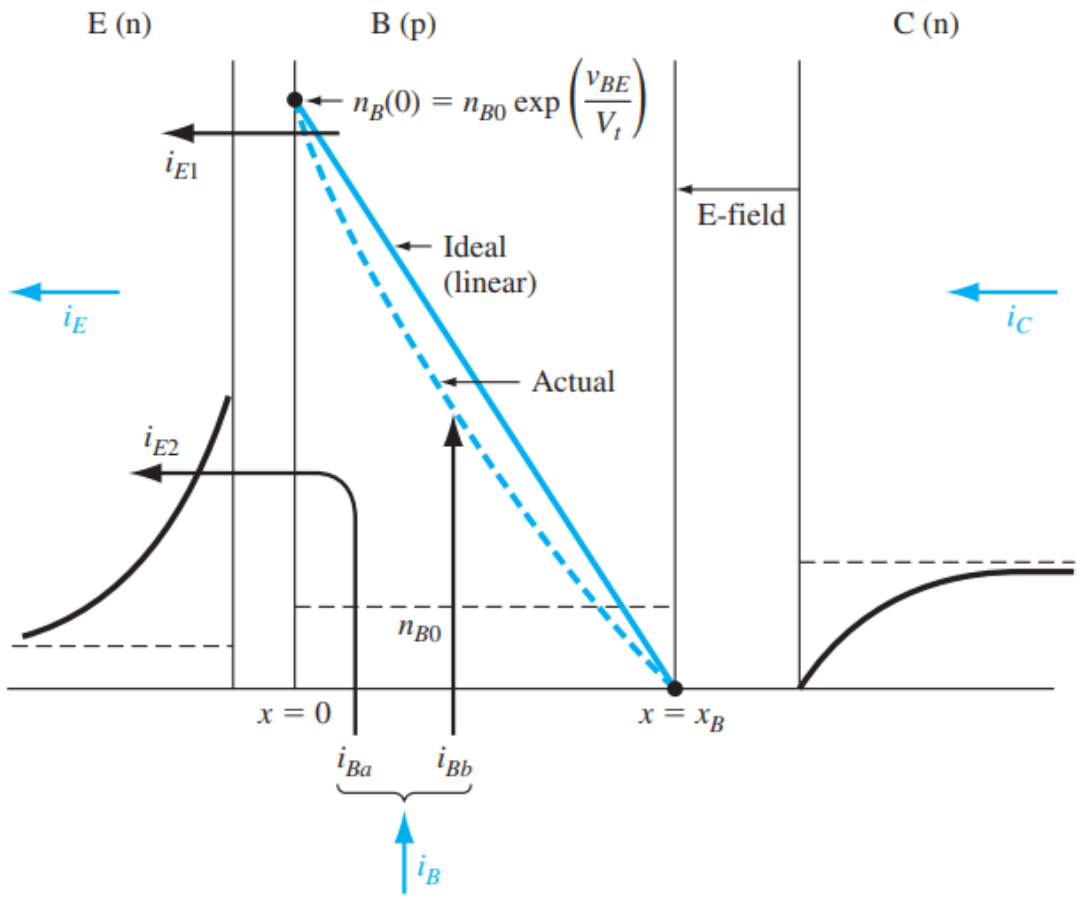

Minority carrier distributions and **basic currents** in a forward-biased npn bipolar Transistor.

Collector Current:

$$i_c = eD_nA_{BE}\frac{dn(x)}{dx} = eD_nA_{BE}\left[\frac{n_B(0)-0}{0-x_B}\right]$$

$$= -\frac{eD_nA_{BE}}{x_B}n_{B0}exp\left(\frac{v_{BE}}{V_t}\right) = I_s exp\left(\frac{v_{BE}}{V_t}\right)$$

$i_c \sim v_{BE}$: The collector current is controlled by the base-emitter voltage

The basic transistor action: the current at one terminal of the device is controlled by the voltage applied to the other two terminals of the device.

12.1.2 Simplified Transistor Current Relation-Qualitative Discussion

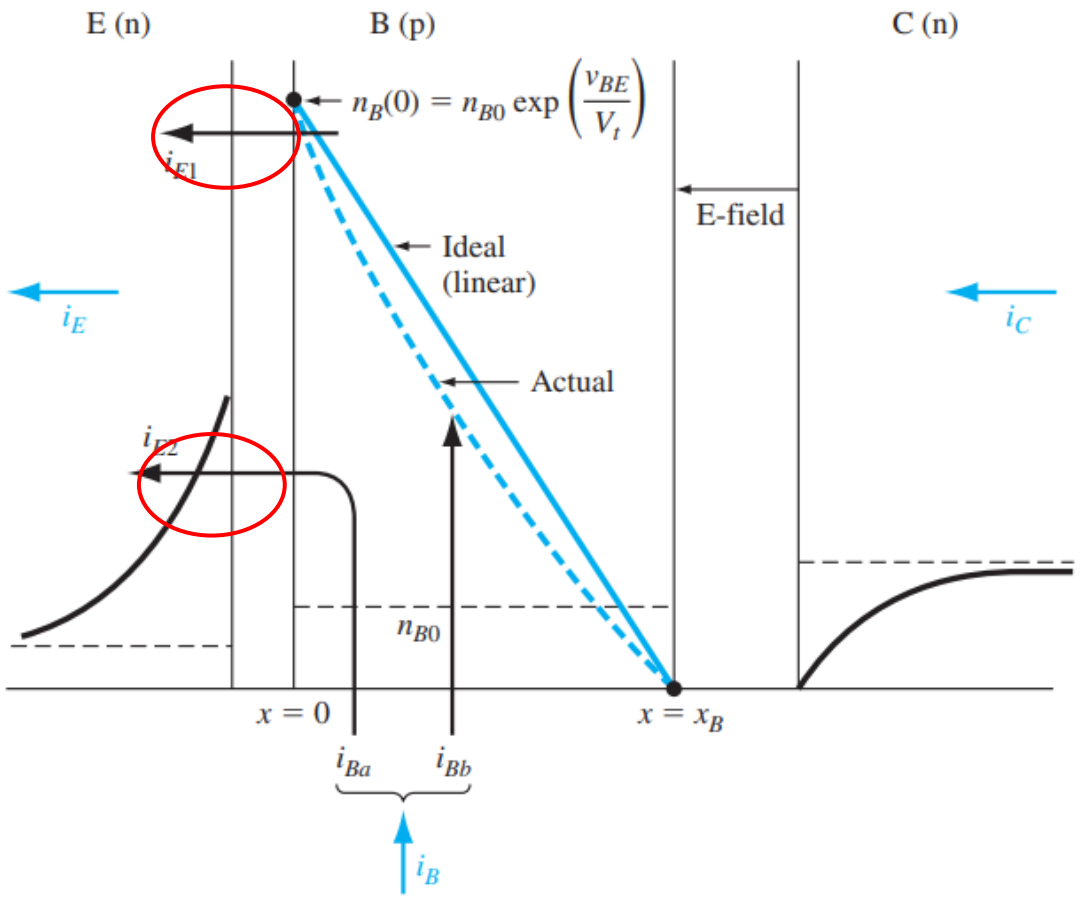

Minority carrier distributions and **basic currents** in a forward-biased npn bipolar Transistor.

Emitter Current:

- i_{E1}: The flow of electrons injected from the emitter into the base.
- i_{E2}: The majority carrier holes in the base are injected across the B-E junction into the emitter, and these holes produce a pn junction current. $i_{E2}=I_{s2}exp\left(\frac{v_{BE}}{V_t}\right)$

Then $i_E=i$ $\left(\frac{BE}{V_t}\right)$

$\frac{i_c}{i_E}=\alpha - co$

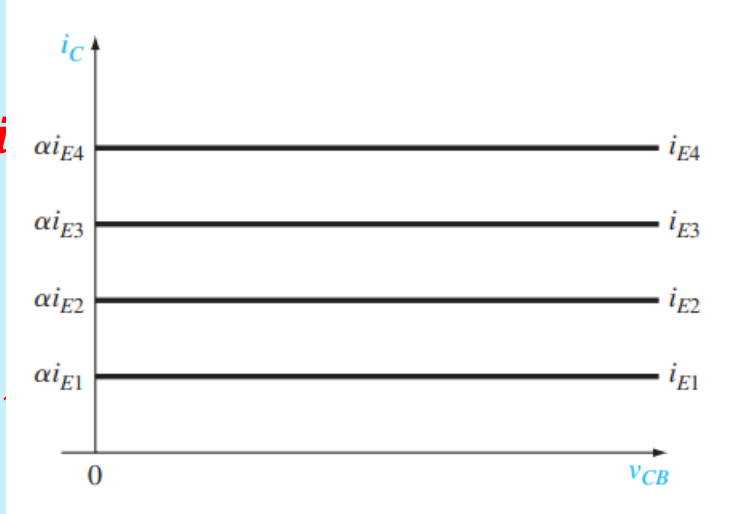

12.1.2 Simplified Transistor Current Relation-Qualitative Discussion

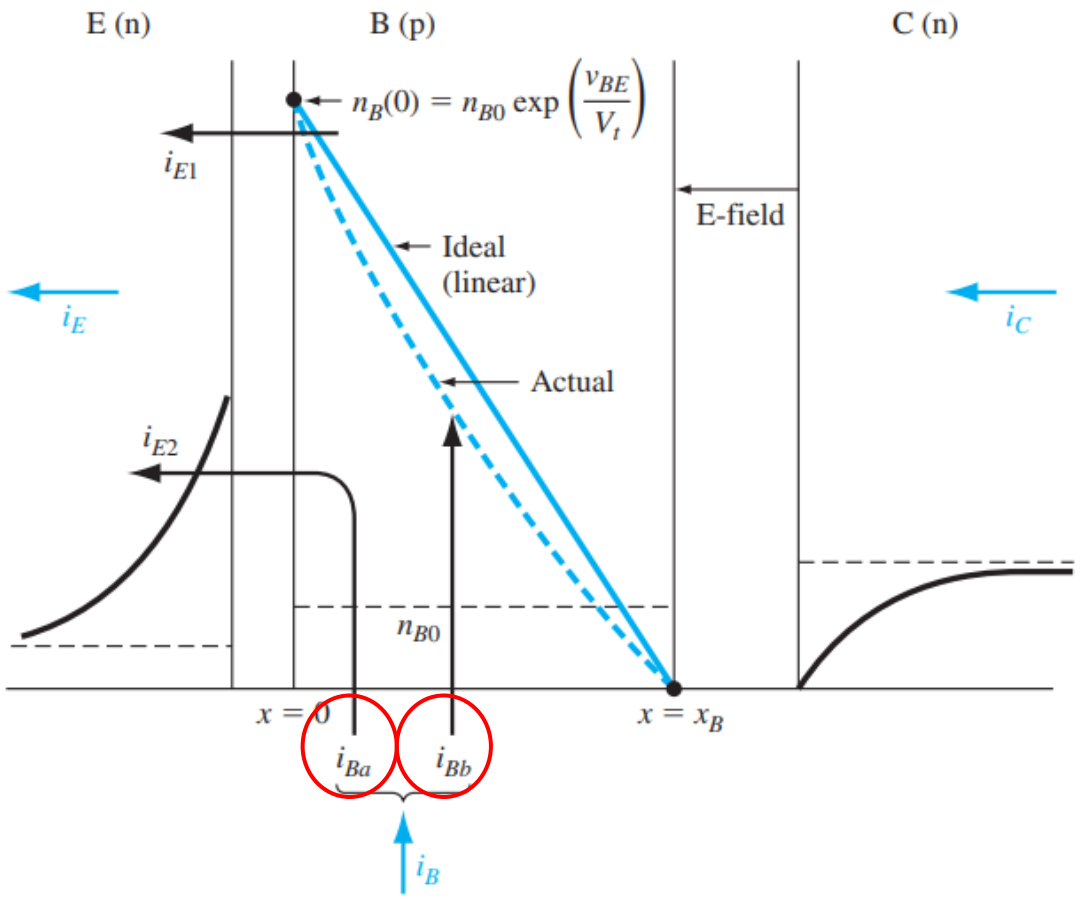

Minority carrier distributions and **basic currents** in a forward-biased npn bipolar Transistor.

Base Current:

- i_{Ba}: The majority carrier holes in the base are injected across the B-E junction into the emitter, and these holes produce a pn junction current. $\sim exp\left(\frac{v_{BE}}{V_t}\right)$

- i_{Bb}: The **recombination** of minority carrier electrons with majority carrier holes in the base. . $\sim exp\left(\frac{v_{BE}}{V_t}\right)$

Then $i_B = i_{Ba} + i_{Bb} \sim exp\left(\frac{v_{BE}}{V_t}\right)$

$\frac{i_c}{i_B} = \beta$ – *common –emitter current gain.* $>>1$

12.1.3 The Modes of Operation

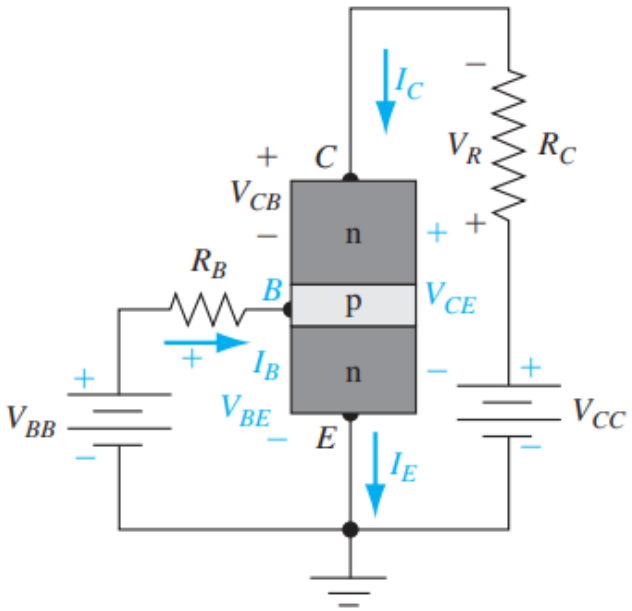

An npn bipolar transistor in a common-emitter circuit configuration.

$$V_{CC}=V_R+V_{BE} = I_cR_c+V_{CB}+V_{BE}$$

- **Cutoff:** $V_{BE}\leq 0, V_{BC}<0$:
- **Forward-active:** $V_{BE} > 0, V_{BC}<0$
- **Saturation:** $V_{BE} > 0, V_{BC}>0$

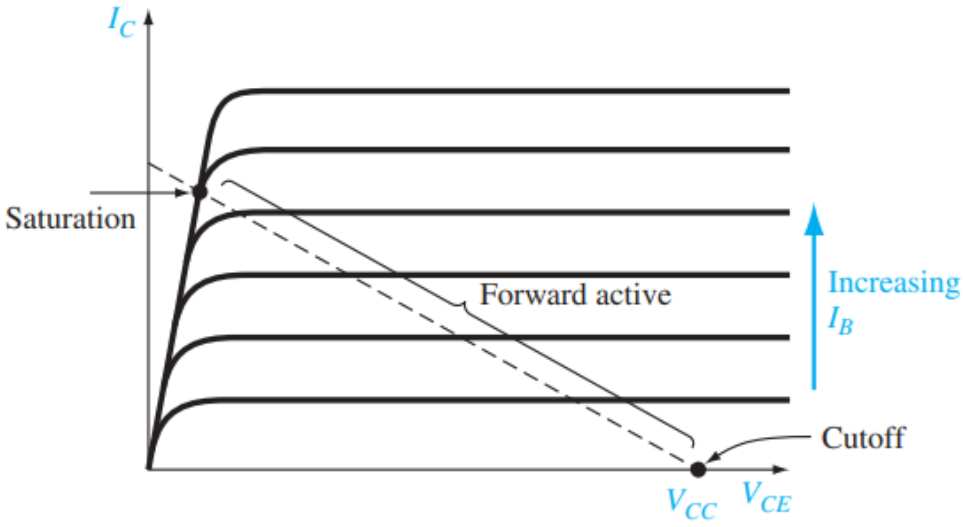

Bipolar tra rent-voltage characteris osed.

Loa

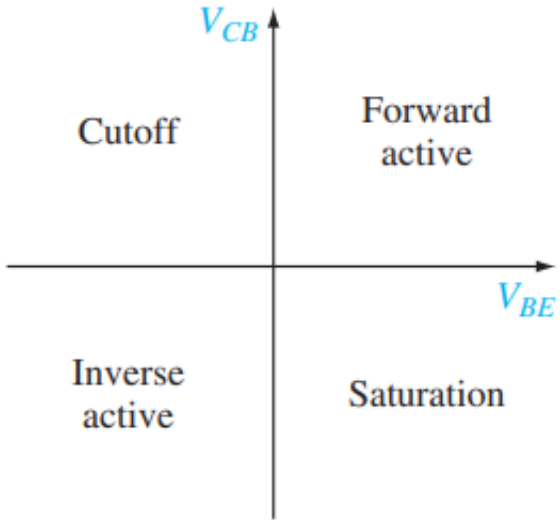

12.2 Minority carrier distribution

The currents in the bipolar transistor are determined by minority carrier diffusion, then we must determine the steady-state minority carrier distribution in each of the three transistor regions.

- **Notation used in the analysis of the bipolar transistor**

Notation	Definition
For both the npn and pnp transistors	
N_E, N_B, N_C	Doping concentrations in the emitter, base, and collector
x_E, x_B, x_C	Widths of neutral emitter, base, and collector regions
D_E, D_B, D_C	*Minority carrier* diffusion coefficients in emitter, base, and collector regions
L_E, L_B, L_C	*Minority carrier* diffusion lengths in emitter, base, and collector regions
τ_{E0}, τ_{B0}, τ_{C0}	*Minority carrier* lifetimes in emitter, base, and collector regions

……

12.2.1 Forward-Active Mode

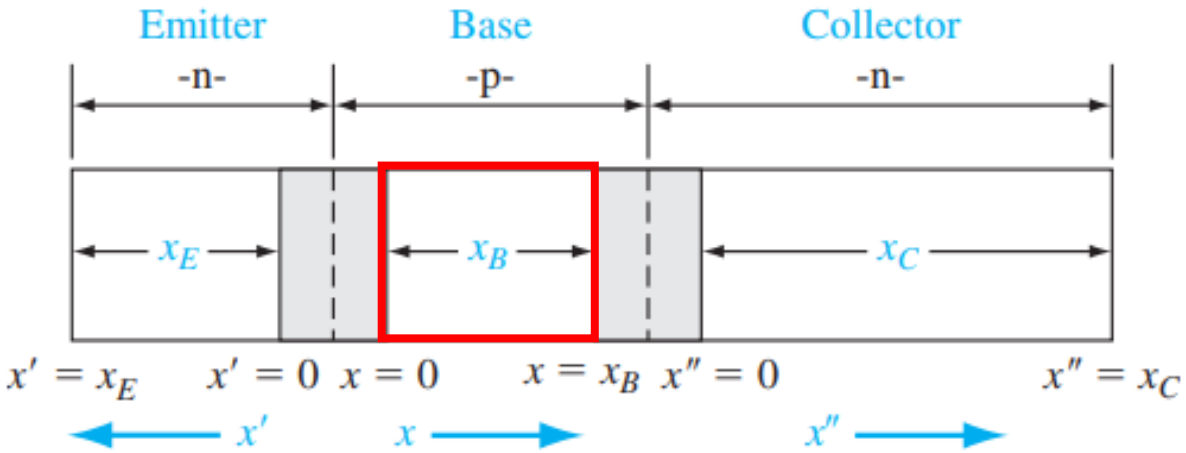

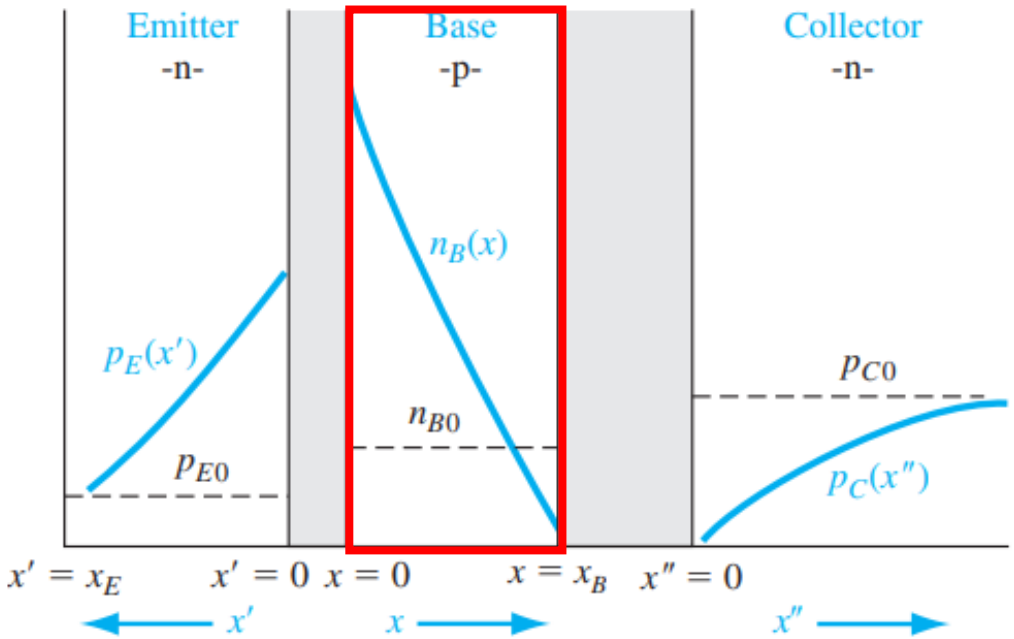

Base Region:

- **Transport equation:** $D_B \frac{\partial^2(\delta n_B(x))}{\partial x^2} - \frac{\delta n_B(x)}{\tau_{B0}} = 0$

$$\delta n_B(x) = A exp\left(\frac{x}{L_B}\right) + B exp\left(-\frac{x}{L_B}\right)$$

$$L_B = \sqrt{D_B \tau_{B0}}$$

- **Boundary condition:**

$$\delta n_B(0) = n_B(x=0) - n_{B0} = n_{B0}\left[\exp\left(\frac{eV_{BE}}{kT}\right) - 1\right]$$

$$\delta n_B(x_B) = n_B(x = x_B) - n_{B0} = 0 - n_{B0} = -n_{B0}$$

- **Excess minority carrier concentration:**

$$\delta n_B(x) = \frac{n_{B0}\left\{\left[\exp\left(\frac{eV_{BE}}{kT}\right) - 1\right]\sinh\left(\frac{x_B - x}{L_B}\right) - \sinh\left(\frac{x}{L_B}\right)\right\}}{\sinh\left(\frac{x_B}{L_B}\right)}$$

12.2.1 Forward-Active Mode

Base Region:

- **Excess minority carrier concentration:**

$$\delta n_B(x) = \frac{n_{B0}\left\{\left[\exp\left(\frac{eV_{BE}}{kT}\right) - 1\right]\sinh\left(\frac{x_B - x}{L_B}\right) - \sinh\left(\frac{x}{L_B}\right)\right\}}{\sinh\left(\frac{x_B}{L_B}\right)}$$

$\sinh(x) \approx x$ for $x \ll 1$

$$\delta n_B(x) \approx \frac{n_{B0}}{x_B}\left\{\left[\exp\left(\frac{eV_{BE}}{kT}\right) - 1\right](x_B - x) - x\right\}$$

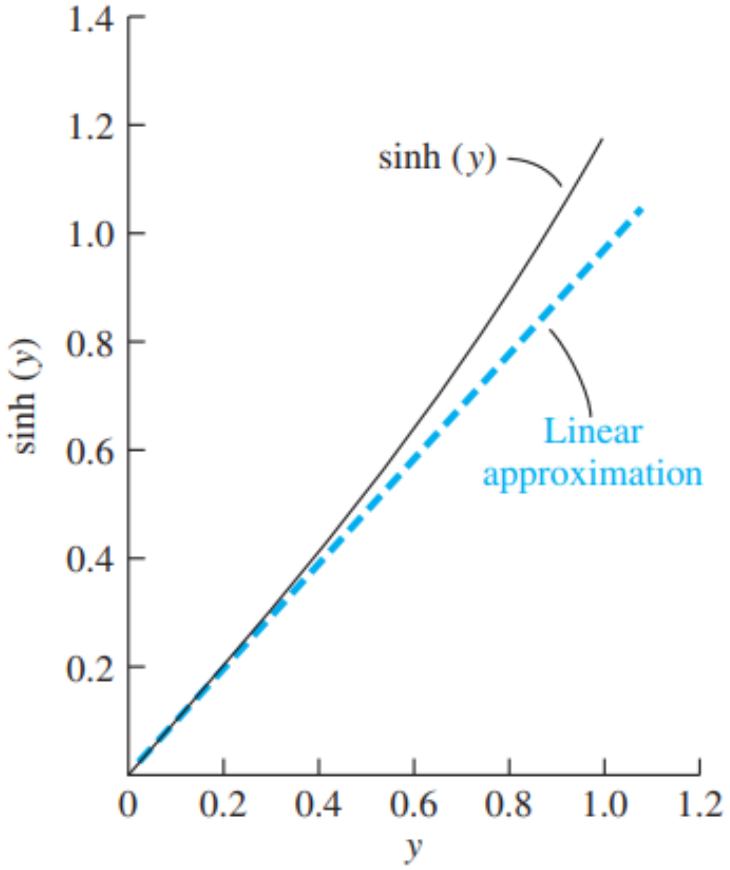

The excess electron concentration δn_B is approximately a **linear function** of x through **the neutral base region**.

12.2.1 Forward-Active Mode

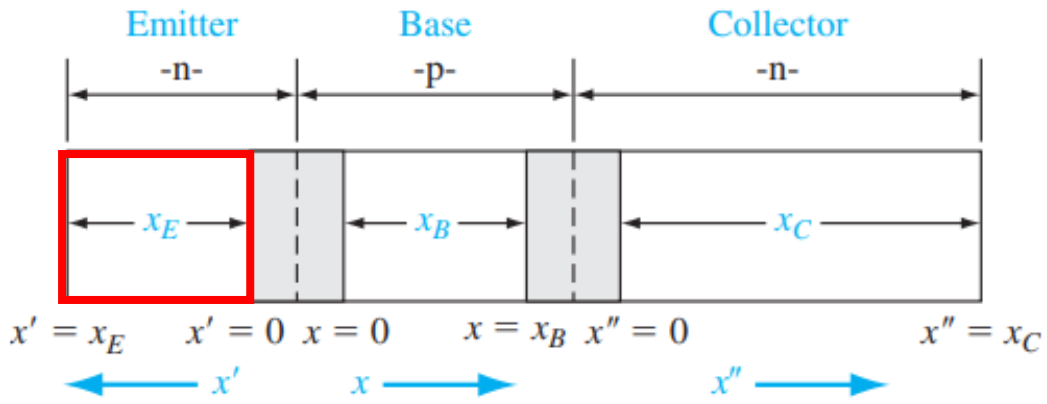

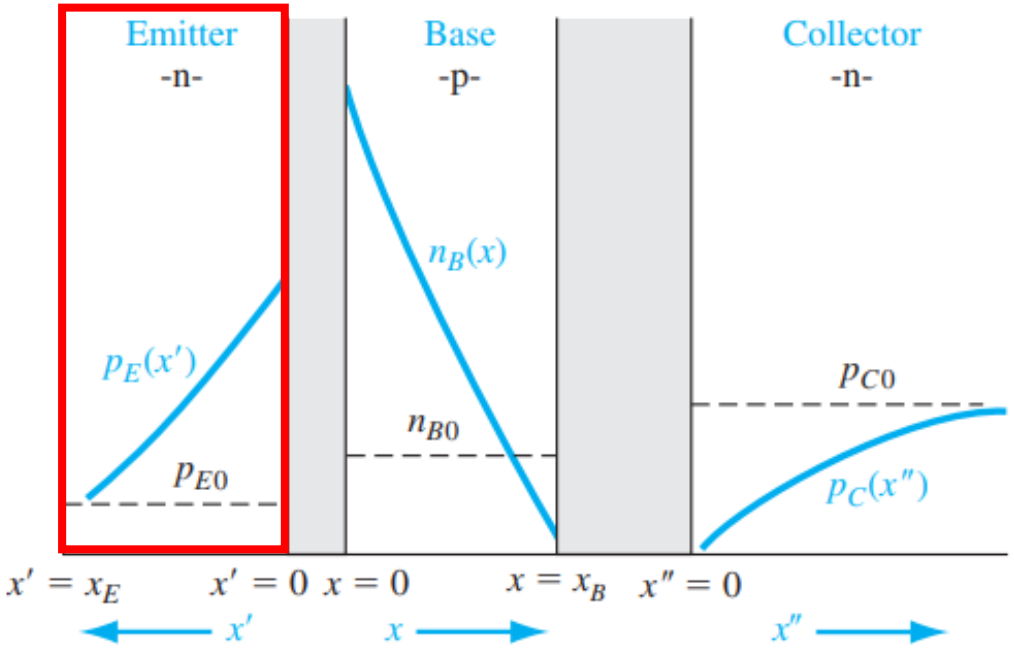

Emitter Region:

- **Transport equation:** $D_E \dfrac{\partial^2[\delta p_E(x')]}{\partial x'^2} - \dfrac{\delta p_E(x')}{\tau_{E0}} = 0$

$$\delta p_E(x') = C \exp\left(\frac{+x'}{L_E}\right) + D \exp\left(\frac{-x'}{L_E}\right)$$

$$L_E = \sqrt{D_E \tau_{E0}}$$

- **Boundary condition:**

$$\delta p_E(0) = p_E(x' = 0) - p_{E0} = p_{E0}\left[\exp\left(\frac{eV_{BE}}{kT}\right) - 1\right]$$

$$\delta p_E(x_E) = 0$$

- **Excess minority carrier concentration:**

$$\boxed{\delta p_E(x') = \frac{p_{E0}\left[\exp\left(\frac{eV_{BE}}{kT}\right) - 1\right]\sinh\left(\frac{x_E - x'}{L_E}\right)}{\sinh\left(\frac{x_E}{L_E}\right)}}$$

12.2.1 Forward-Active Mode

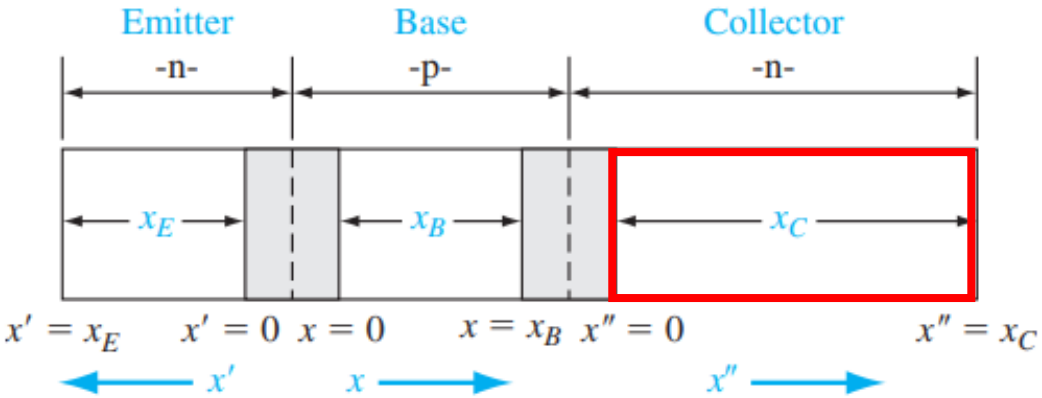

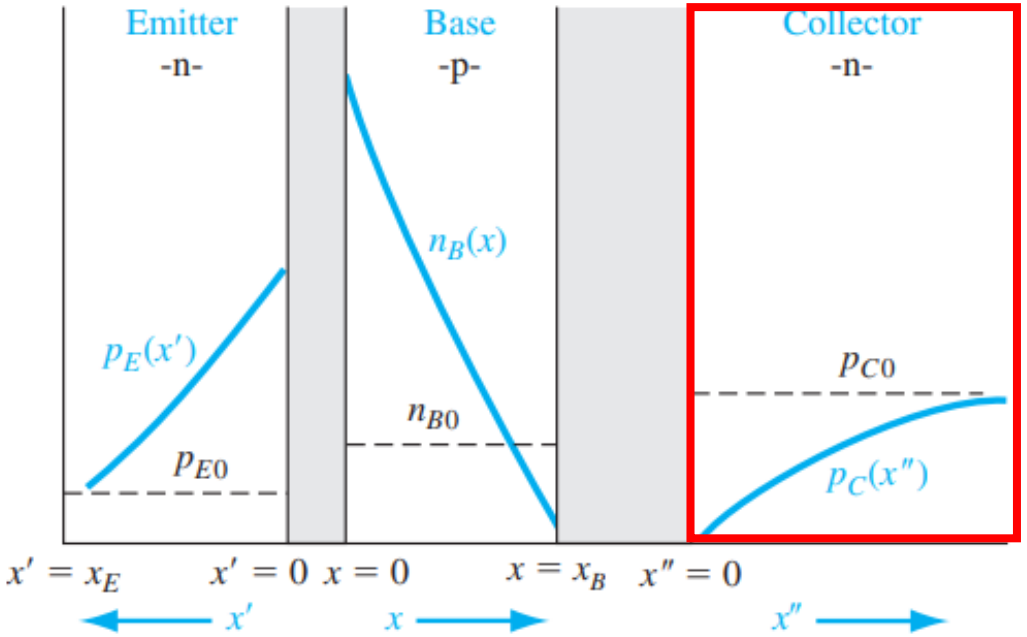

Collector Region:

- **Transport equation:** $D_C \dfrac{\partial^2[\delta p_C(x'')]}{\partial x''^2} - \dfrac{\delta p_C(x'')}{\tau_{C0}} = 0$

$$\delta p_C(x'') = G \exp\left(\frac{x''}{L_C}\right) + H \exp\left(\frac{-x''}{L_C}\right)$$

$$L_C = \sqrt{D_C \tau_{C0}}$$

- **Boundary condition:**

✓ The collector is long and the excess concentration remain finite, then G=0;

✓ $\delta p_C(x'' = 0) \equiv \delta p_C(0) = p_C(x'' = 0) - p_{C0} = 0 - p_{C0} = -p_{C0}$

- **Excess minority carrier concentration:**

$$\boxed{\delta p_C(x'') = -p_{C0} \exp\left(\frac{-x''}{L_C}\right)}$$

12.2.2 Other Modes of Operation

Cutoff Mode

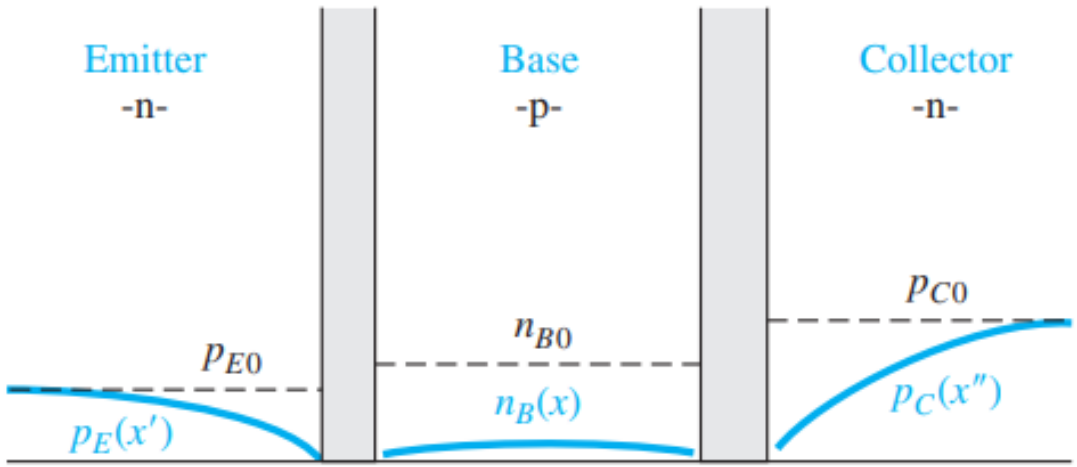

Both the B-E and B-C junctions are **reverse biased,** then the minority carrier concentrations are **zero** at each space charge edge.

Saturation Mode

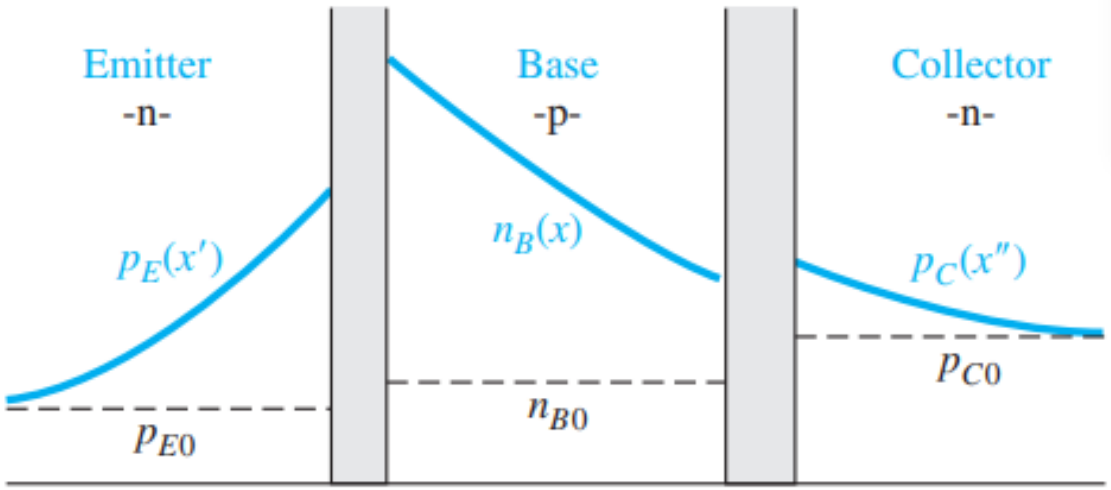

Both the B-E and B-C junctions are **forward biased,** then **excess** minority carriers exist at each space charge edge.

12.2.2 Other Modes of Operation

Inverse-Active Mode

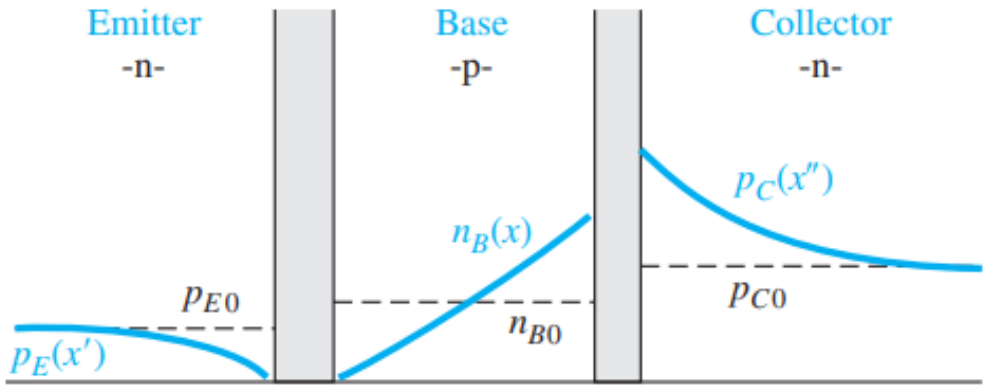

(a)

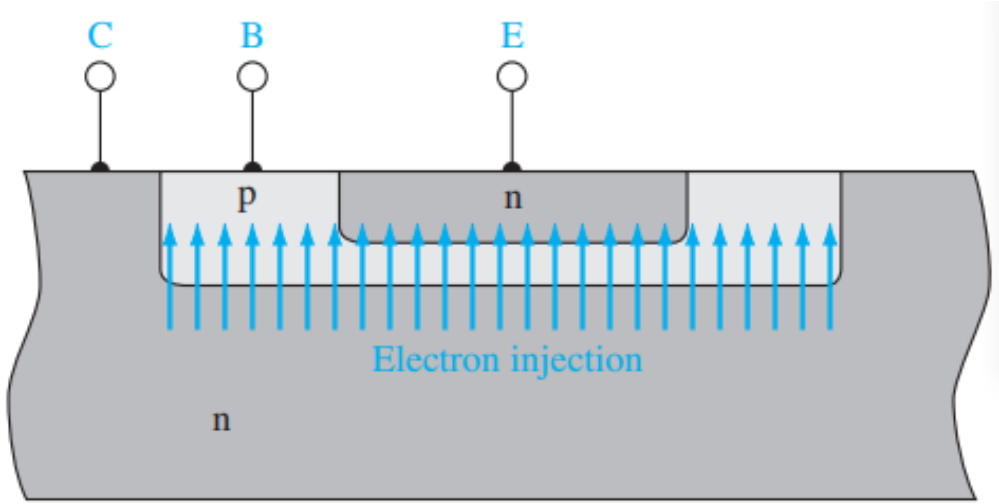

(b)

- The B-E is reverse biased and the B-C is forward biased, the emitter and collector currents **will change direction** compared with the forward-active mode.

- The transistor is **not symmetrical** **(area, doping concentrations).**

12.3 Transistor Currents and Low-Frequency Common-Base Current Gain

- **The collector current** is a function of **the number of majority carriers reaching the collector** after being injected from the emitter across the B-E junction.
- The **common-base current gain** is defined as **the ratio of collector current to emitter current**.

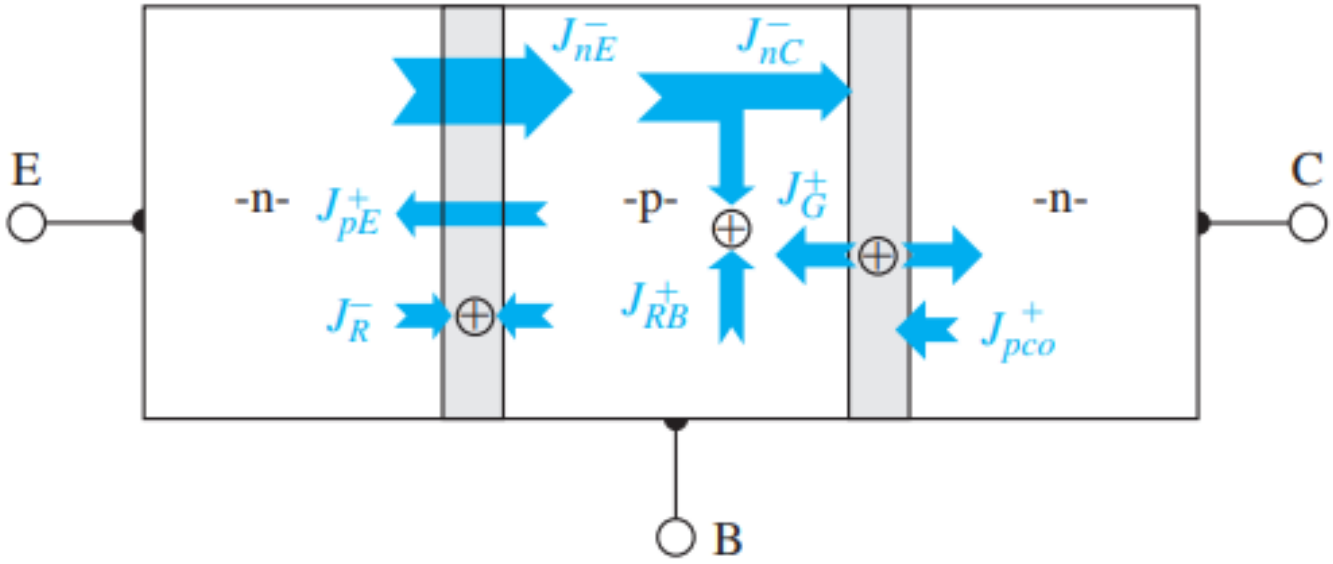

12.3.1 Current Gain- Contributing Factoras

Current density components in an npn bipolar transistor operating in the forward-active mode:

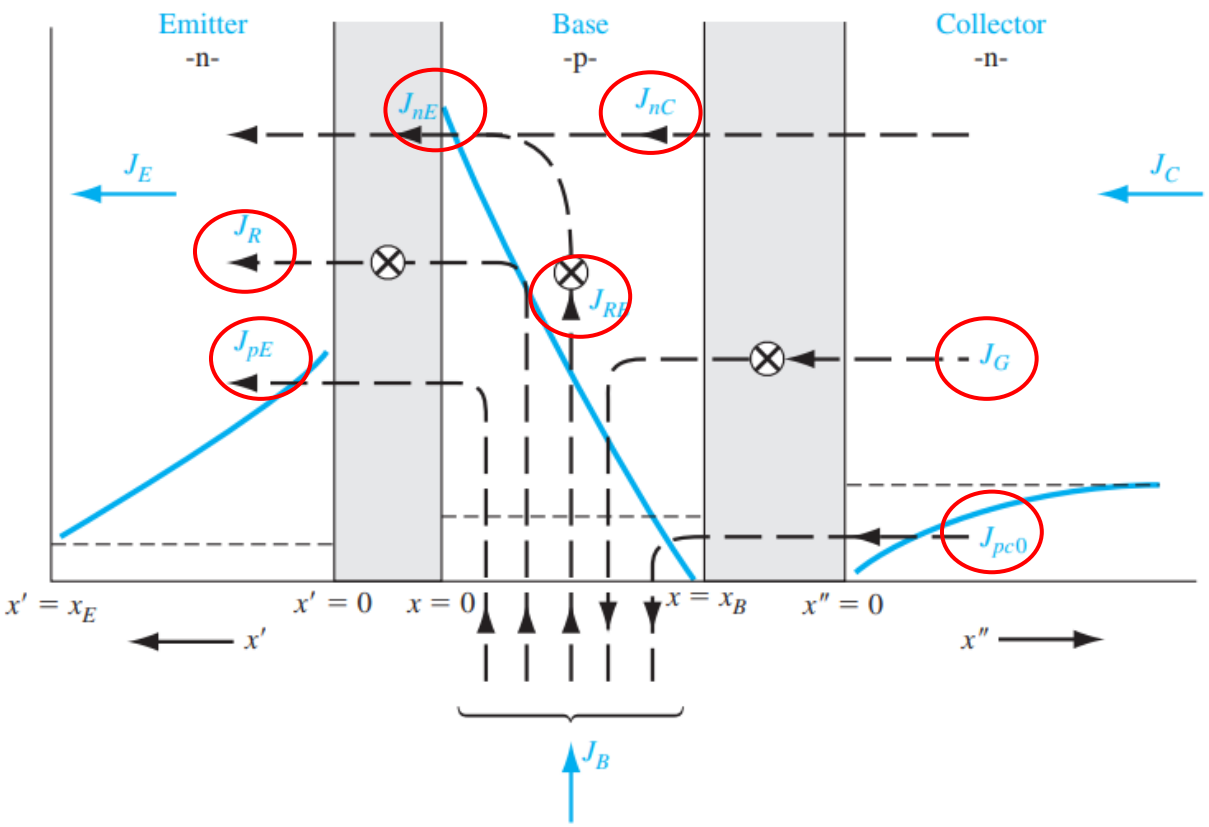

- J_{nE} **and** J_{nc}: Due to the diffusion of minority carrier electrons in the base at $x = 0$ *or* $x = x_B$.
- J_{RB}: The difference between J_{nE} **and** J_{nc}, which is due to the **recombination** of excess minority carrier electrons with majority carrier holes in the base.

- J_{pE}: Due to the diffusion of minority carrier holes in the emitter at $x' = 0$
- J_R: Due to the **recombination** of carriers in the forward-biased B-E junction.

- J_{pc0}: Due to the diffusion of minority carrier holes in the collector at x"= 0.
- J_G: Due to the **generation** of carriers in the reverse-biased B-C junction.

12.3.1 Current Gain-Contributing Factors

◆ The dc common-base current gain is defined as $\alpha_0 = \frac{I_C}{I_E}$

$$\alpha_0 = \frac{J_C}{J_E} = \frac{J_{nC} + J_G + J_{pC0}}{J_{nE} + J_R + J_{pE}}$$

◆ The small-signal, or sinusoidal, common-base current-gain :

$$\alpha = \frac{\partial J_C}{\partial J_E} = \frac{J_{nC}}{J_{nE} + J_R + J_{pE}}$$

$$\alpha = \left(\frac{J_{nE}}{J_{nE}+J_{pE}}\right)\left(\frac{J_{nC}}{J_{nE}}\right)\left(\frac{J_{nE}+J_{pE}}{J_{nE}+J_R+J_{pE}}\right) = \gamma\alpha_T\delta$$

$$\gamma = \left(\frac{J_{nE}}{J_{nE} + J_{pE}}\right) \equiv \text{emitter injection efficiency factor}$$

$$\alpha_T = \left(\frac{J_{nC}}{J_{nE}}\right) \equiv \text{base transport factor}$$

$$\delta = \frac{J_{nE} + J_{pE}}{J_{nE} + J_R + J_{pE}} \equiv \text{recombination factor}$$

12.3.2 Derivation of Transistor Current Components and Current Gain Factors

$$\alpha = \left(\frac{J_{nE}}{J_{nE}+J_{pE}}\right)\left(\frac{J_{nC}}{J_{nE}}\right)\left(\frac{J_{nE}+J_{pE}}{J_{nE}+J_R+J_{pE}}\right) = \gamma\alpha_T\delta$$

◆ *the emitter injection efficiency factor*

$$\gamma = \left(\frac{J_{nE}}{J_{nE}+J_{pE}}\right) = \frac{1}{\left(1+\frac{J_{pE}}{J_{nE}}\right)} \Rightarrow \boxed{\gamma \approx \frac{1}{1+\frac{N_B}{N_E}\cdot\frac{D_E}{D_B}\cdot\frac{x_B}{x_E}}}$$

◆ *Base Transport factor*

$$\alpha_T = J_{nC}/J_{nE} \Rightarrow \boxed{\alpha_T \approx \frac{1}{\cosh(x_B/L_B)} \approx \frac{1}{1+\frac{1}{2}(x_B/L_B)^2} \approx 1-\frac{1}{2}(x_B/L_B)^2}$$

◆ *Recombination factor*

$$\delta = \frac{J_{nE}+J_{pE}}{J_{nE}+J_R+J_{pE}} \approx \frac{J_{nE}}{J_{nE}+J_R} = \frac{1}{1+J_R/J_{nE}} \Rightarrow \boxed{\delta = \frac{1}{1+\frac{J_{r0}}{J_{s0}}\exp\left(\frac{-eV_{BE}}{2kT}\right)}}$$

12.3.2 Derivation of Transistor Current Components and Current Gain Factors

◆*Recombination factor* ——surface effects

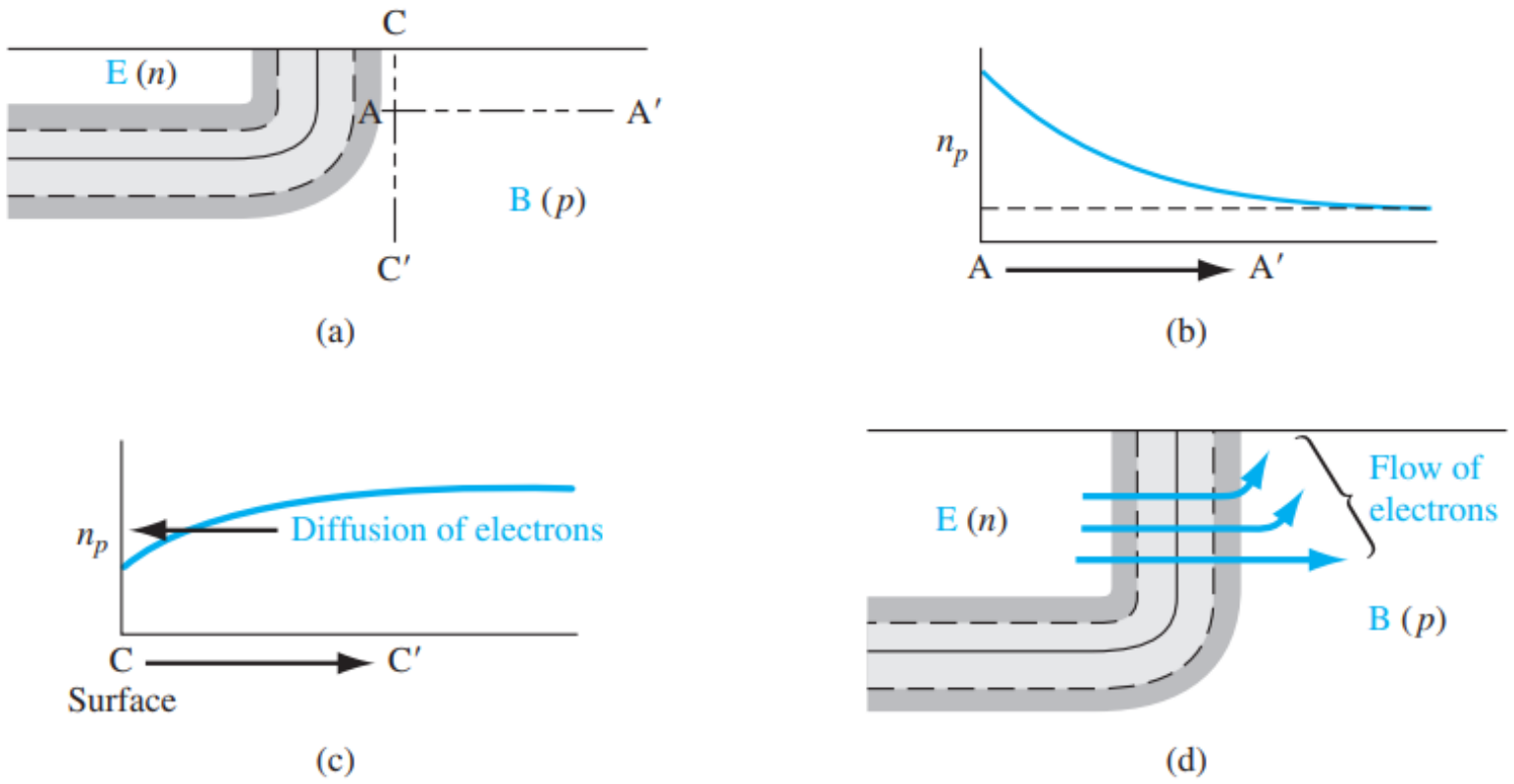

The surface at the E–B junction showing the diffusion of carriers toward the surface

12.3.3 Summary

Summary of limiting factors:

Emitter injection efficiency

$$\gamma \approx \frac{1}{1 + \frac{N_B}{N_E} \cdot \frac{D_E}{D_B} \cdot \frac{x_B}{x_E}} \qquad (x_B \ll L_B), (x_E \ll L_E)$$

Base transport factor

$$\alpha_T \approx \frac{1}{1 + \frac{1}{2}\left(\frac{x_B}{L_B}\right)^2} \qquad (x_B \ll L_B)$$

Recombination factor

$$\delta = \frac{1}{1 + \frac{J_{r0}}{J_{s0}} \exp\left(\frac{-eV_{BE}}{2kT}\right)}$$

Common-base current gain

$$\alpha = \gamma\alpha_T\delta \approx \frac{1}{1 + \frac{N_B}{N_E} \cdot \frac{D_E}{D_B} \cdot \frac{x_B}{x_E} + \frac{1}{2}\left(\frac{x_B}{L_B}\right)^2 + \frac{J_{r0}}{J_{s0}} \exp\left(\frac{-eV_{BE}}{2kT}\right)}$$

Common-emitter current gain

$$\beta = \frac{\alpha}{1 - \alpha} \approx \frac{1}{\frac{N_B}{N_E} \cdot \frac{D_E}{D_B} \cdot \frac{x_B}{x_E} + \frac{1}{2}\left(\frac{x_B}{L_B}\right)^2 + \frac{J_{r0}}{J_{s0}} \exp\left(\frac{-eV_{BE}}{2kT}\right)}$$

12.4 Nonideal Effects

- Base Width Modulation
- High Injection
- Emitter Bandgap Narrowing
- Current Crowding
- Breakdown Voltage

12.4.1 Base Width Modulation

◆A reduction in base width will cause the gradient in the minority carrier concentration to increase, which in turn causes an increase in the diffusion current. This effect is known as base width modulation; it is also called the Early effect.

$$i_C = eD_nA_{BE}\frac{dn(x)}{dx} = eD_nA_{BE}\left[\frac{n_B(0)-0}{0-x_B}\right] = \frac{-eD_nA_{BE}}{x_B}\cdot n_{B0}\exp\left(\frac{v_{BE}}{V_t}\right)$$

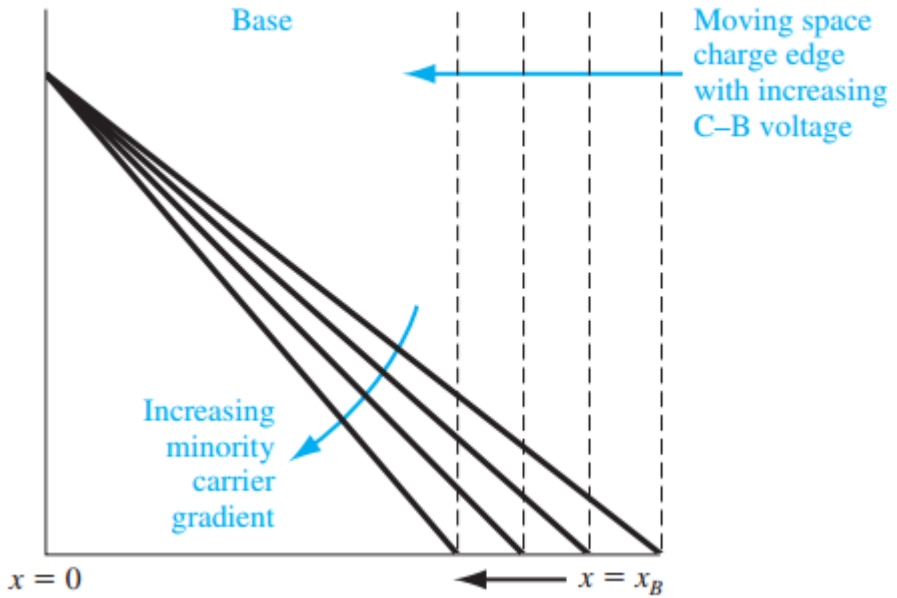

12.4.1 Base Width Modulation

- Early effect produces a nonzero slope and gives rise to a finite output conductance. If the collector current characteristics are extrapolated to zero collector current, the curves intersect the voltage axis at a point that is defined as the Early voltage .
- It is a common parameter given in transistor specifi cations; typical values of Early voltage are in the 100-300V.

$$\frac{dI_C}{dV_{CE}} \equiv g_o = \frac{I_C}{V_{CE} + V_A} = \frac{1}{r_o}$$

$$I_C = g_o\,(V_{CE} + V_A) = \frac{1}{r_o}(V_{CE} + V_A)$$

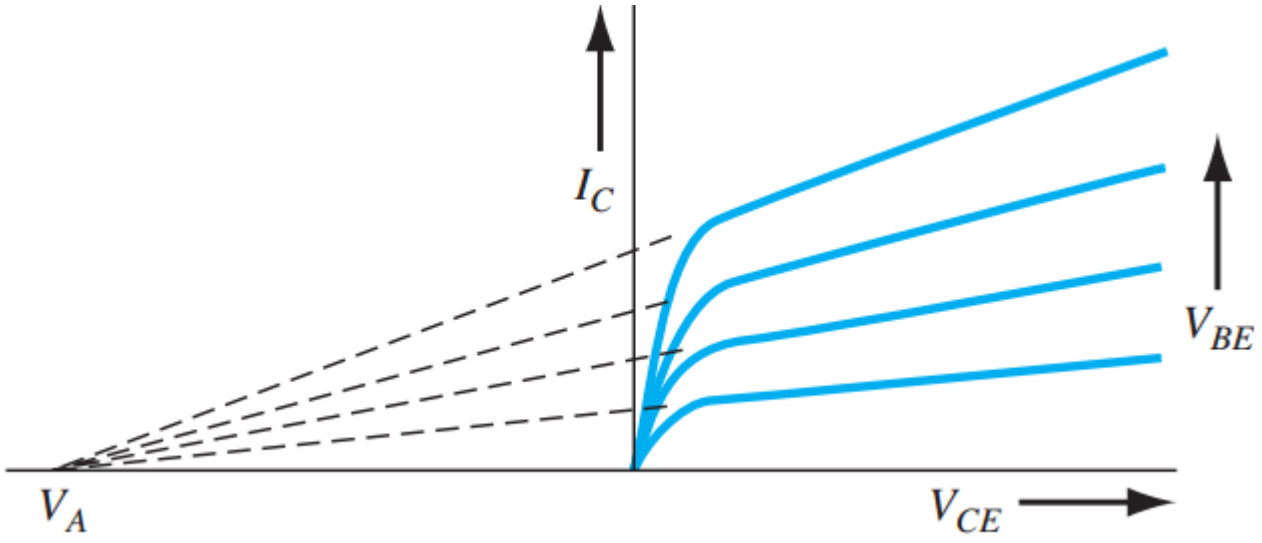

12.4.2 High Injection

Two effects occur in the transistor at high injection:

1、The common-emitter current gain decreases;

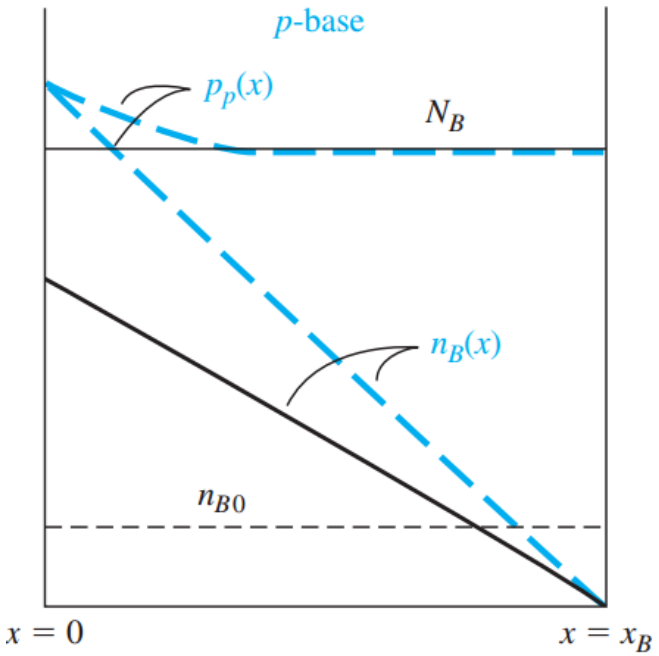

Figure 12.23 | Minority and majority carrier concentrations in the base under low and high injection (solid line: low injection; dashed line: high injection).

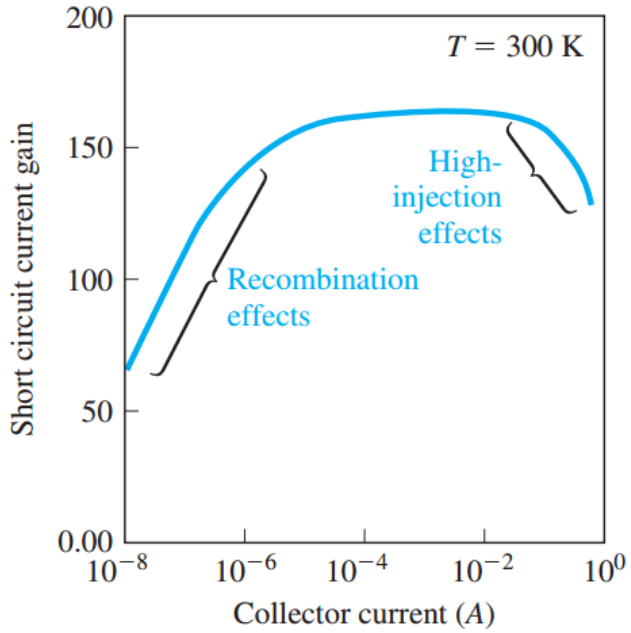

Figure 12.24 | Common-emitter current gain versus collector current.
(From Shur [14].)

12.4.2 High Injection

2、The excess minority carrier concentration in the base, and hence the collector current, will increase at a slower rate with B–E voltage in high injection than low injection;

$$p_p(0) = p_{p0} = N_a$$

$$n_p(0) = n_{p0}\exp\left(\frac{eV_{BE}}{kT}\right)$$

$$p_p(0)n_p(0) = p_{p0}n_{p0}\exp\left(\frac{eV_{BE}}{kT}\right)$$

$$n_p(0) \approx n_{p0}\exp\left(\frac{eV_{BE}}{2kT}\right)$$

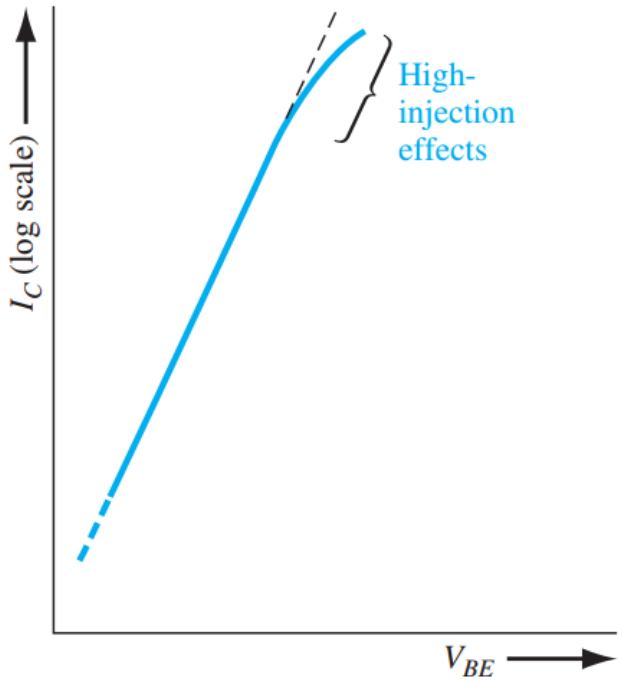

12.4.3 Emitter Bandgap Narrowing

- As the doping continues to increase, the donor band widens, becomes skewed, and moves up toward the conduction band, eventually merging with it. At this point, the effective bandgap energy has decreased.

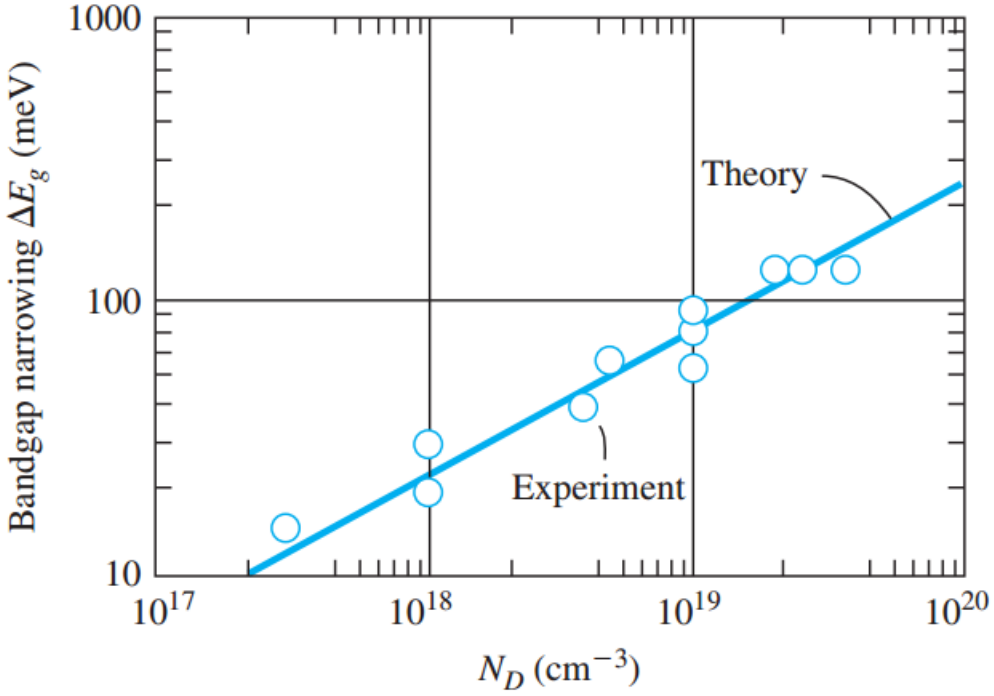

12.4.3 Emitter Bandgap Narrowing

A reduction in the bandgap energy increases the intrinsic carrier concentration.The intrinsic carrier concentration:

$$n_i^2 = N_c N_v \exp\left(\frac{-E_g}{kT}\right)$$

Heavily doped emitter:

$$n_{iE}^2 = N_c N_v \exp\left[\frac{-(E_{g0} - \Delta E_g)}{kT}\right] = n_i^2 \exp\left(\frac{\Delta E_g}{kT}\right)$$

Emitter injection efficiency factor:

$$\gamma = \frac{1}{1 + \frac{p_{E0} D_E L_B}{n_{B0} D_B L_E} \cdot \frac{\tanh(x_B/L_B)}{\tanh(x_E/L_E)}}$$

$$p'_{E0} = \frac{n_{iE}^2}{N_E} = \frac{n_i^2}{N_E} \exp\left(\frac{\Delta E_g}{kT}\right)$$

12.4.4 Current Crowding

◆Non-uniform carrier injection leads to a non-uniform current distribution along the emitter junction, resulting in higher current density near the edges. This phenomenon is called the current crowding effect.

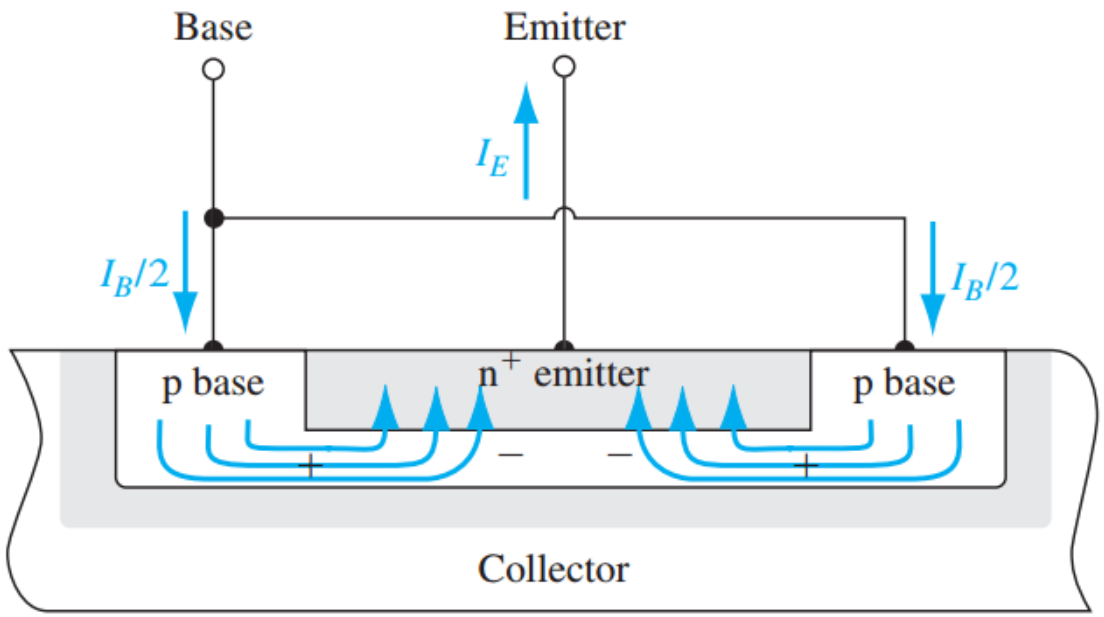

The lateral distribution of base current

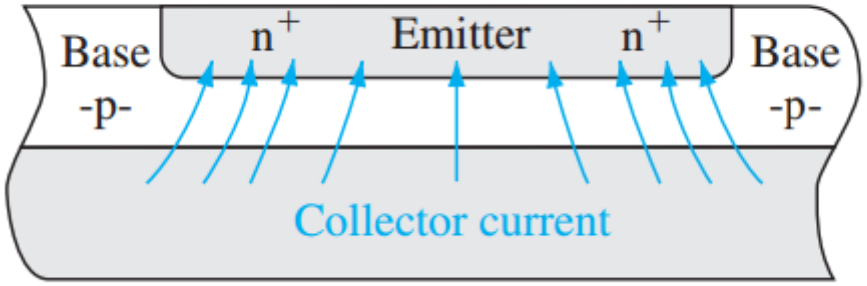

The emitter current crowding effect

12.4.4 Current Crowding

◆To avoid the current crowding effect, these transistors are usually designed with narrow emitter widths and fabricated with an interdigitated design.

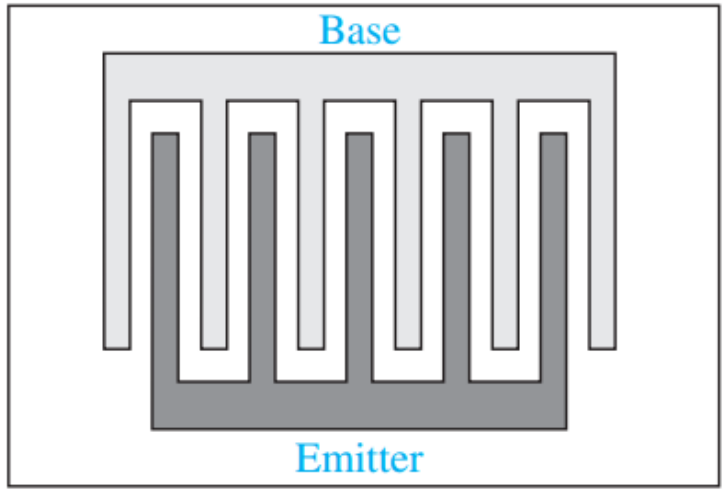

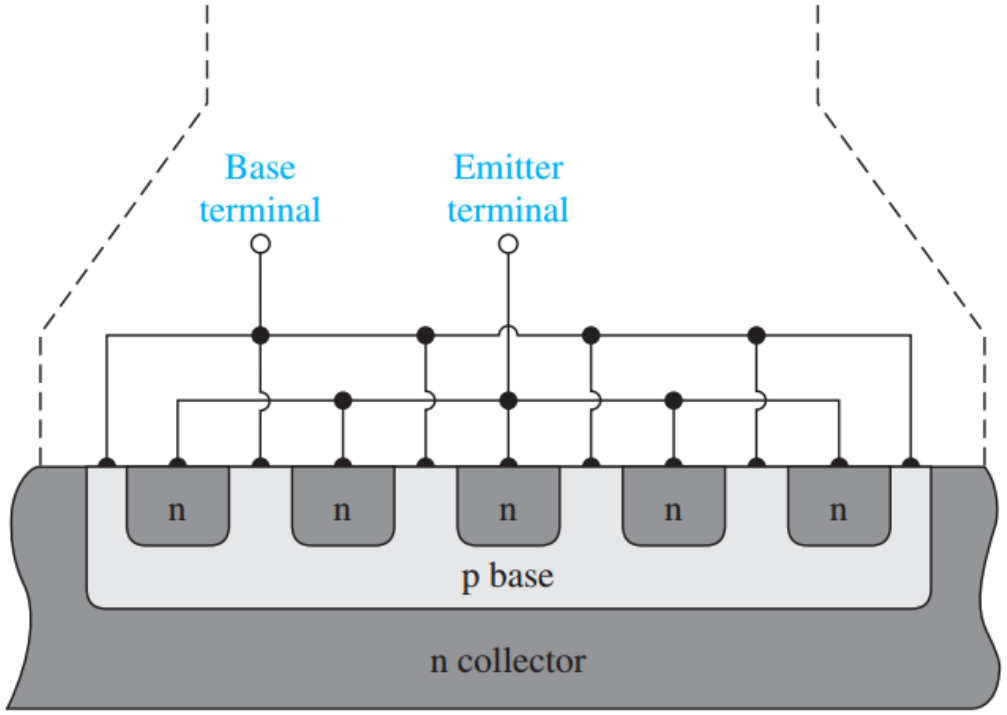

12.4.5 Breakdown Voltage: Punch-through breakdown

- Punch-through effect : As the reverse-biased B–C voltage increases, the B–C space charge region widens and extends farther into the neutral base. It is possible for the B–C depletion region to penetrate completely through the base and reach the B–E space charge region .
- Punch-through breakdown: The lowering of the potential barrier at the B–E junction produces a large increase in current with a very small increase in C–B voltage.

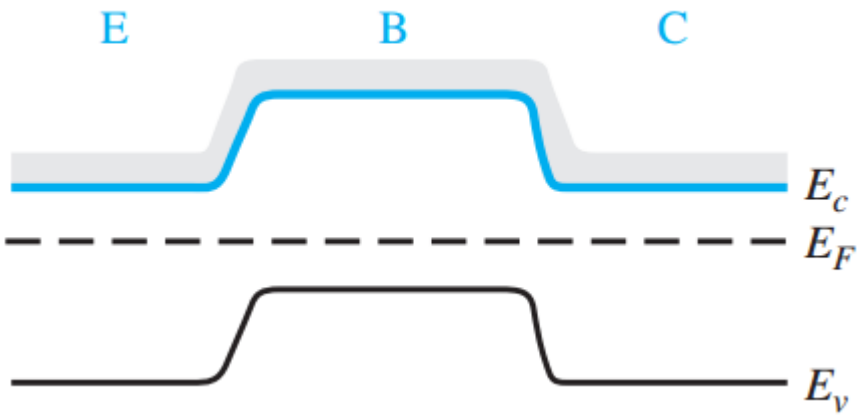

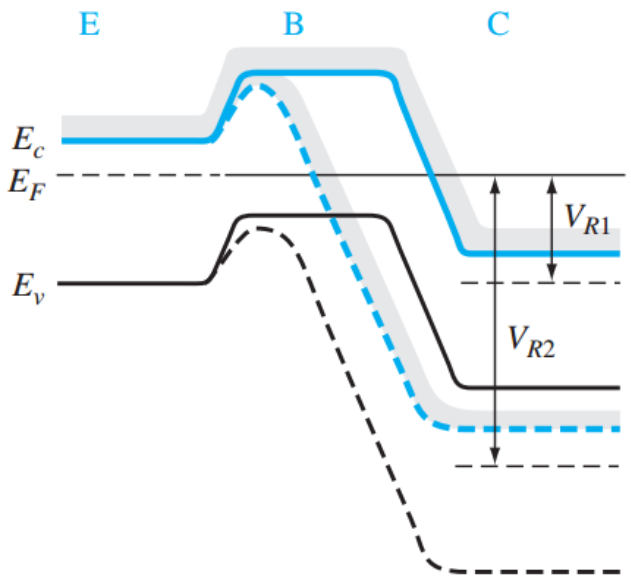

12.4.5 Breakdown Voltage: Punch-through breakdown

When $x_{dB} = x_{BO}$:

$$x_{dB} = x_{BO} = \left\{ \frac{2\epsilon_s (V_{bi} + V_{pt})}{e} \cdot \frac{N_C}{N_B} \cdot \frac{1}{N_C + N_B} \right\}^{1/2}$$

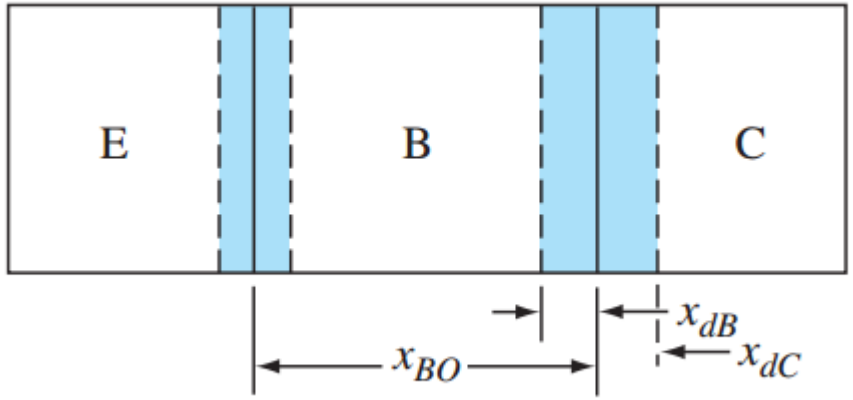

V_{pt} is the reverse-biased B–C voltage at punch-through.

$$V_{pt} = \frac{e x_{BO}^2}{2\epsilon_s} \cdot \frac{N_B (N_C + N_B)}{N_C}$$

12.4.5 Breakdown Voltage: Avalanche breakdown

I_{CBO} is the reverse-biased B-C junction current

I_{CEO} is forward-biased B–E junction produces current

$$I_{CEO} = \alpha I_{CEO} + I_{CBO}$$

or

$$I_{CEO} = \frac{I_{CBO}}{1-\alpha} \approx \beta I_{CBO}$$

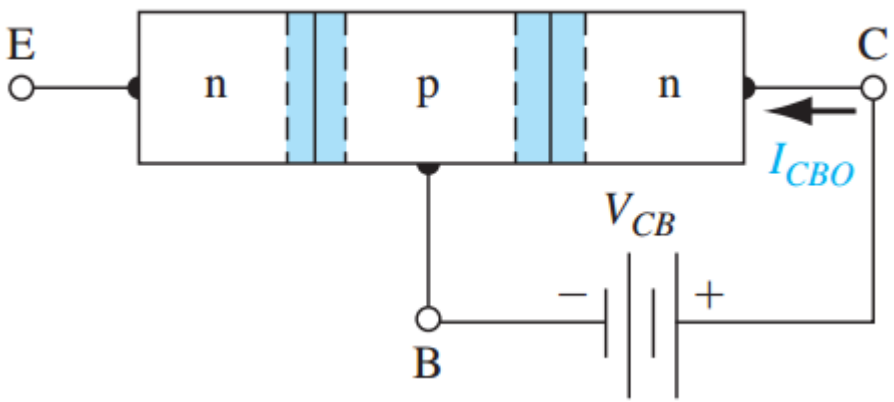

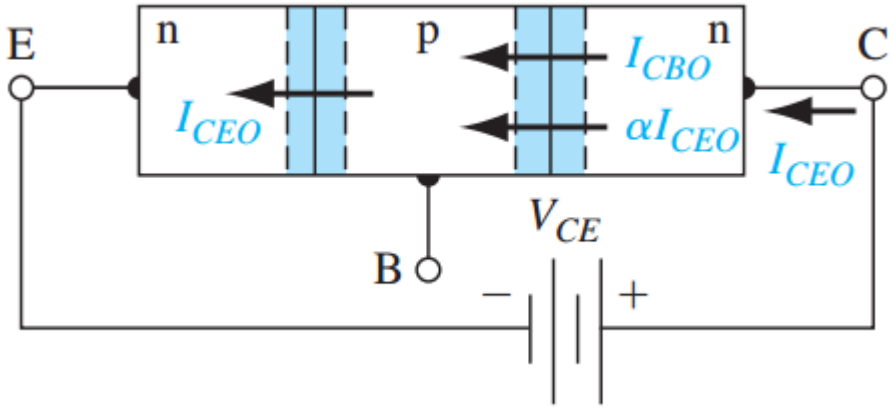

12.4.5 Breakdown Voltage: Avalanche breakdown

$$BV_{CEO} = BV_{CBO}\sqrt[n]{1-\alpha}$$

$$BV_{CEO} = \frac{BV_{CBO}}{\sqrt[n]{\beta}}$$

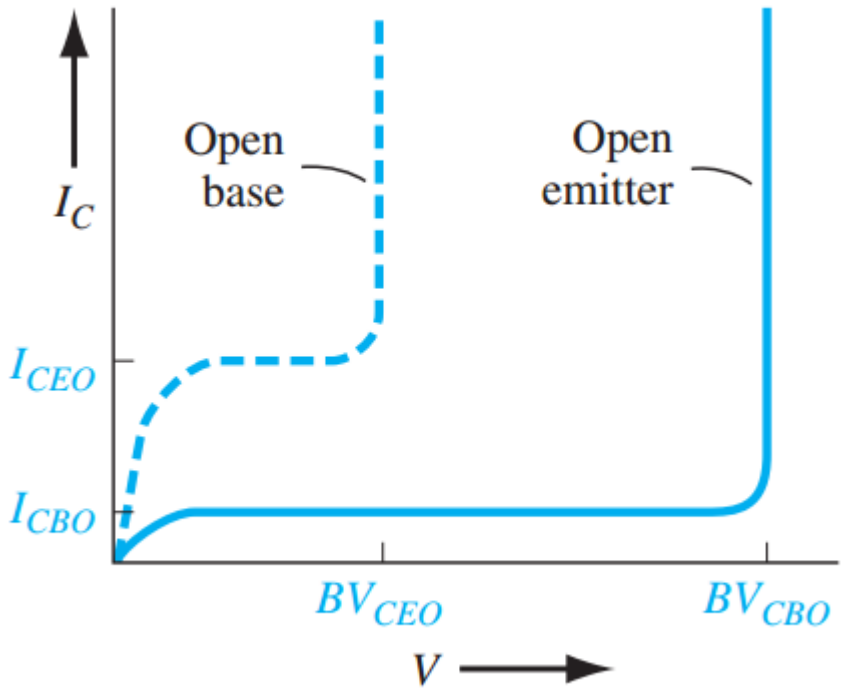

The breakdown voltage in the open-base configuration is smaller, by the factor $\sqrt[n]{\beta}$, than the actual avalanche junction breakdown voltage.

12.5.1 Ebers–Moll Model

Switching bipolar transistor, involves turning a transistor from its “off” state, or cutoff, to its “on” state, either forwardactive or saturation, and then back to its “off” state.

The Ebers–Moll model is used in switching applications

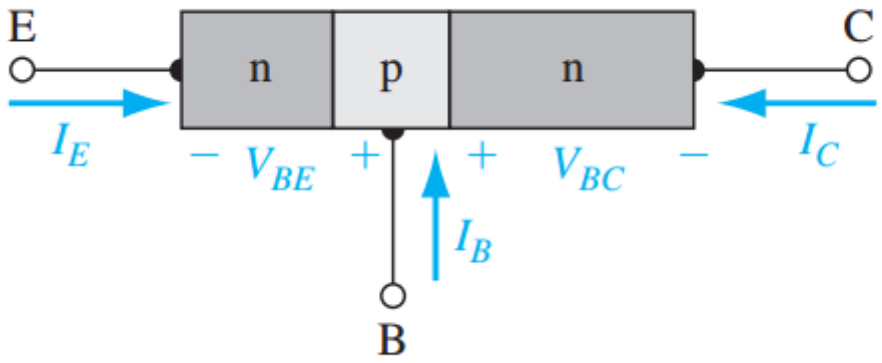

$$I_C = \alpha_F I_{ES}\left[\exp\left(\frac{eV_{BE}}{kT}\right) - 1\right] - I_{CS}\left[\exp\left(\frac{eV_{BC}}{kT}\right) - 1\right]$$

$$I_E = \alpha_R I_{CS}\left[\exp\left(\frac{eV_{BC}}{kT}\right) - 1\right] - I_{ES}\left[\exp\left(\frac{eV_{BE}}{kT}\right) - 1\right]$$

12.5.1 Ebers–Moll Model

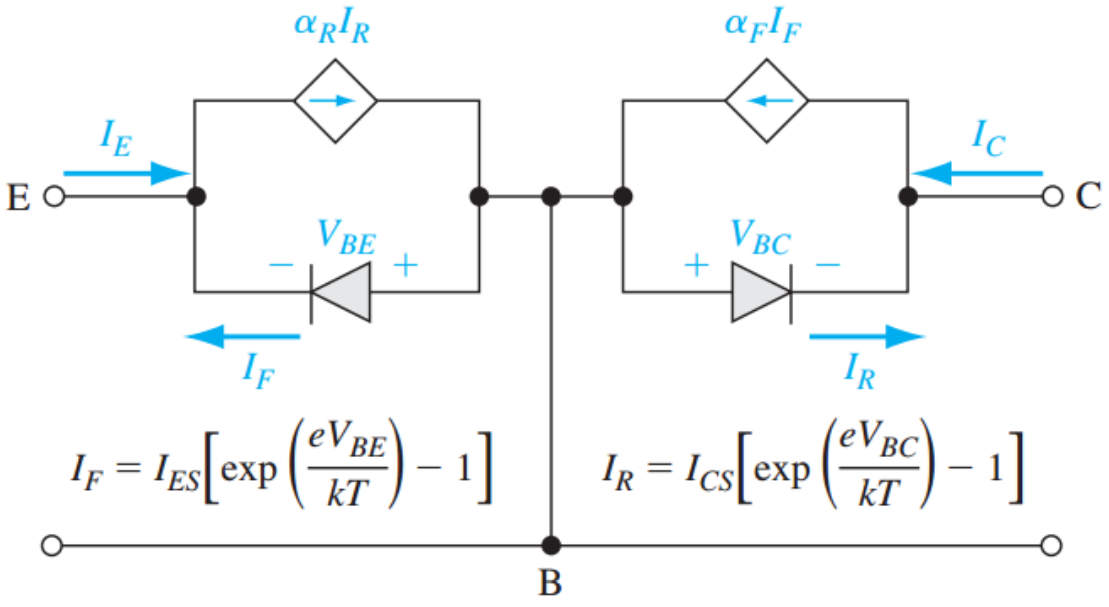

$$V_{CE}(\text{sat}) = V_{BE} - V_{BC}$$

$$V_{BE} = V_t \ln\left[\frac{I_C(1-\alpha_R) + I_B + I_{ES}(1-\alpha_F\alpha_R)}{I_{ES}(1-\alpha_F\alpha_R)}\right]$$

$$V_{BC} = V_t \ln\left[\frac{\alpha_F I_B - (1-\alpha_F)I_C + I_{CS}(1-\alpha_F\alpha_R)}{I_{CS}(1-\alpha_F\alpha_R)}\right]$$

$$V_{CE}(\text{sat}) = V_{BE} - V_{CB} = V_t \ln\left[\frac{I_C(1-\alpha_R) + I_B}{\alpha_F I_B - (1-\alpha_F)I_C} \cdot \frac{I_{CS}}{I_{ES}}\right]$$

12.5.2 Hybrid-Pi Model

Amplification bipolar transistor, involves superimposing sinusoidal signals on dc values so that bias voltages and currents are only perturbed.

The hybrid-pi model is used in amplification applications

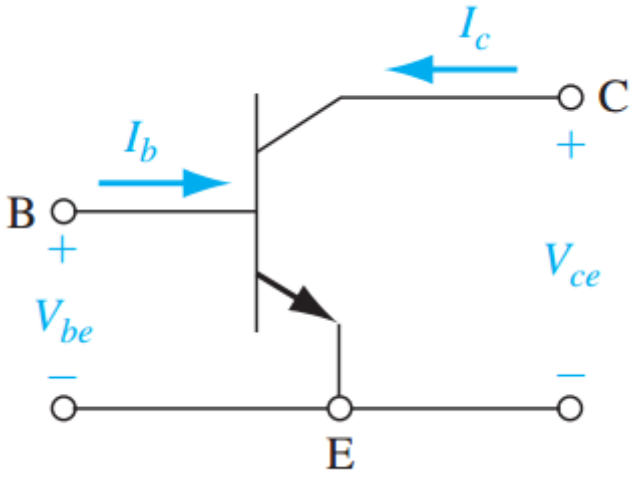

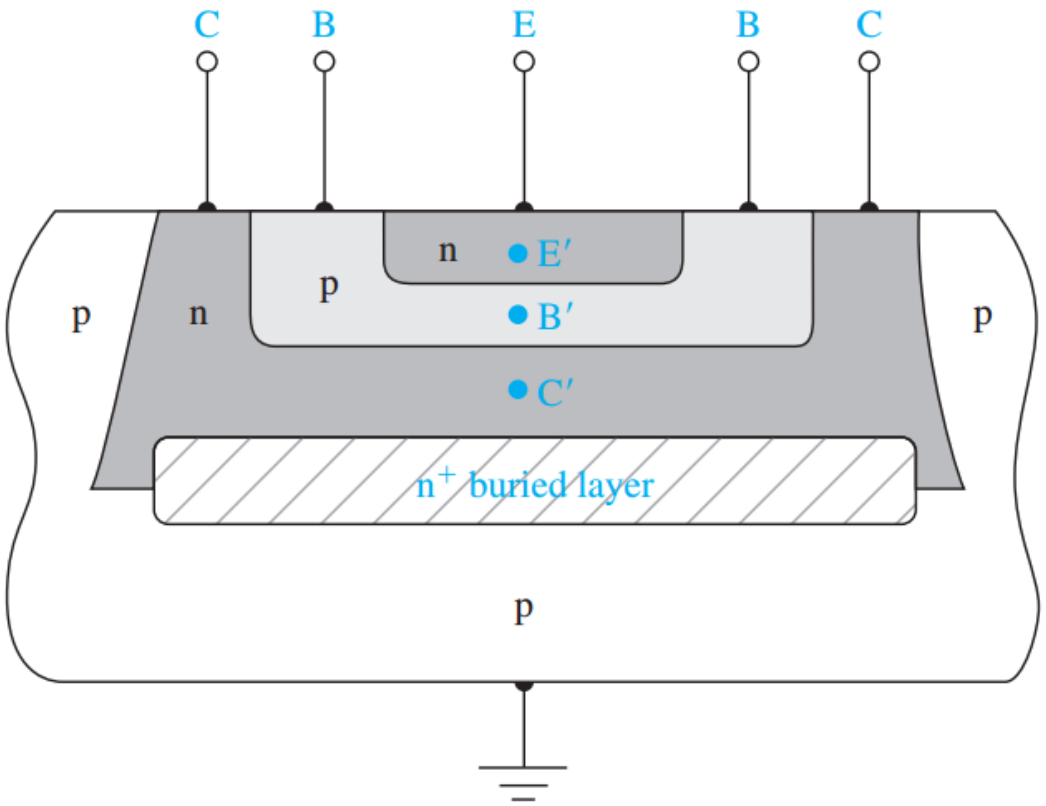

12.5.2 Hybrid-Pi Model

equivalent circuit between the base and emitter

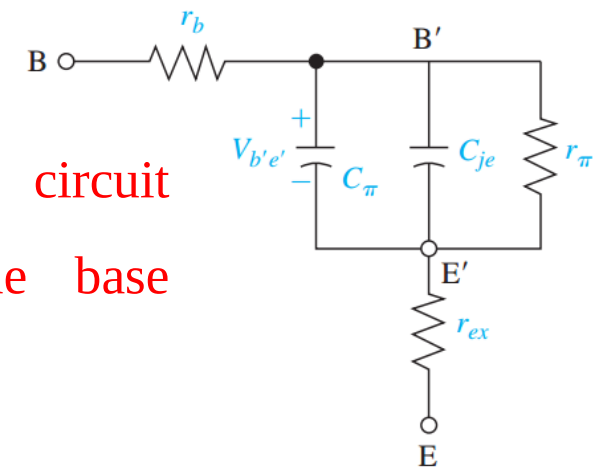

equivalent circuit between the base and collector

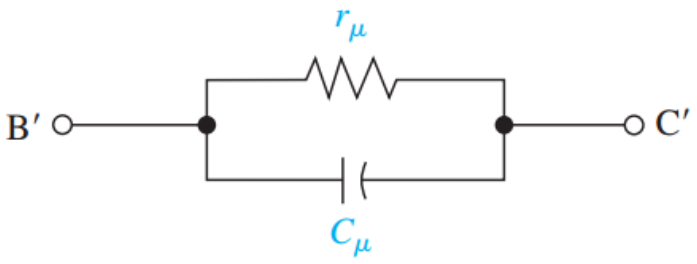

equivalent circuit between the collector and emitter

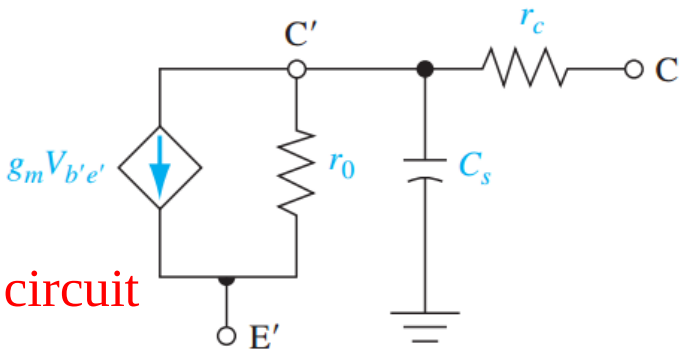

Hybrid-pi equivalent circuit

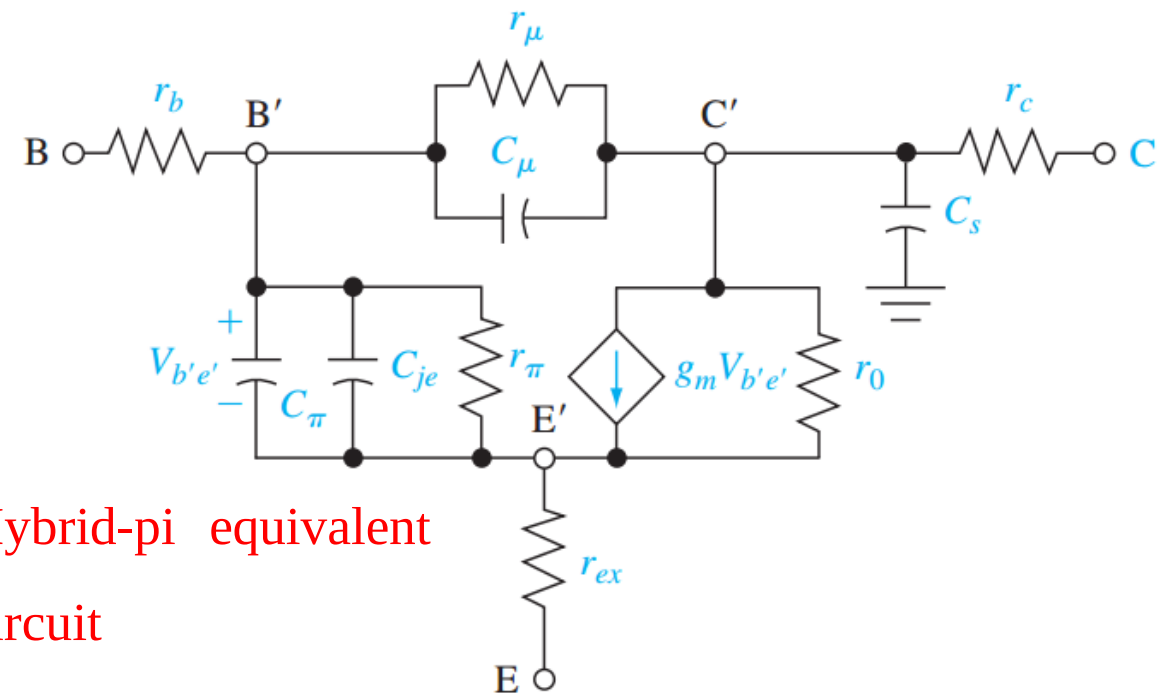

12.6.1 Time-Delay Factors

$$\tau_{ec} = \tau_e + \tau_b + \tau_d + \tau_c$$

$$\tau_e = r'_e\,(C_{je} + C_p)$$

$$\tau_b = \frac{x_B^2}{2D_n}$$

$$\tau_d = \frac{x_{dc}}{v_s}$$

$$\tau_c = r_c(C_\mu + C_s)$$

τ_{ec} = emitter-to-collector time delay

τ_e = emitter–base junction capacitance charging time

τ_b = base transit time

τ_d = collector depletion region transit time

τ_c = collector capacitance charging time

12.6.2 Transistor Cutoff Frequency

f_α is defined as the α cutoff frequency

$$f_\alpha = \frac{1}{2\pi\tau_{ec}}$$

f_T is defined as the cutoff frequency

$$f_T = \frac{1}{2\pi\tau_{ec}}$$

f_β is defined as the β cutoff frequency

$$f_\beta \cong \frac{f_T}{\beta_0}$$

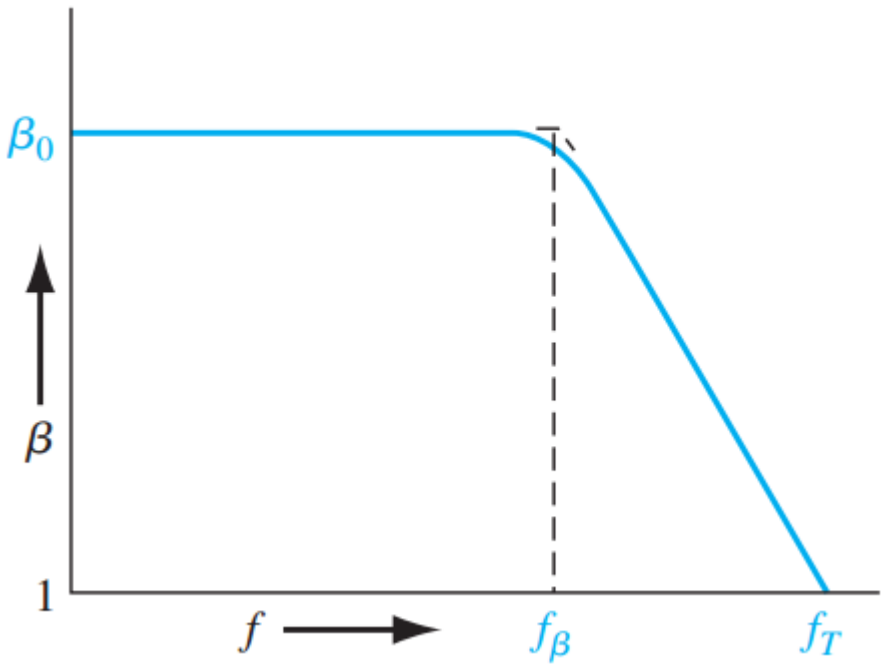

12.7.1 Switching Characteristics

◆ Switching from cutoff to saturation;

◆ *Delay time*: collector current increases from 0-10% of its final value;

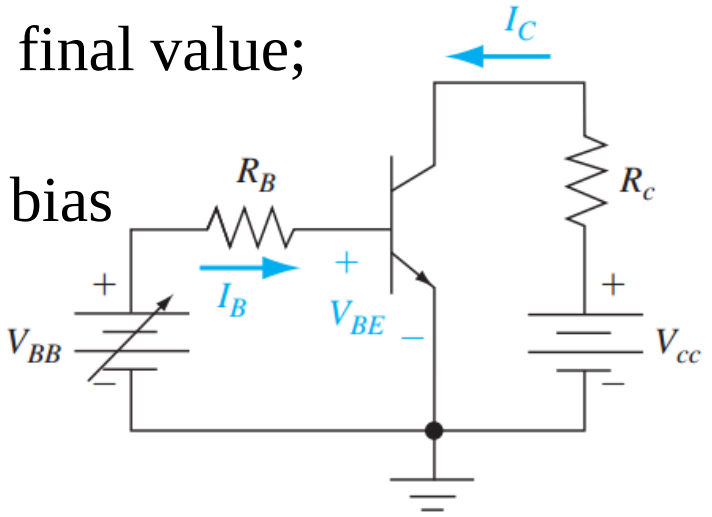

$0 \le t \le t_1$,B–E junction from reverse bias to a slight forward bias

$t_1 \le t \le t_2$,B–E junction from near cutoff to near saturation

$t_2 < t$, transistor into saturation

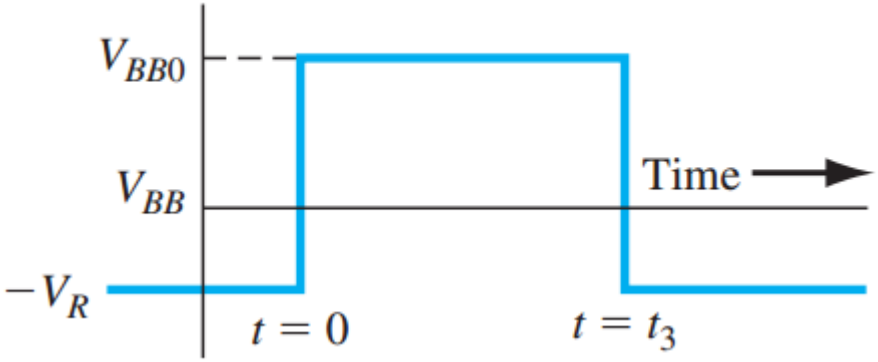

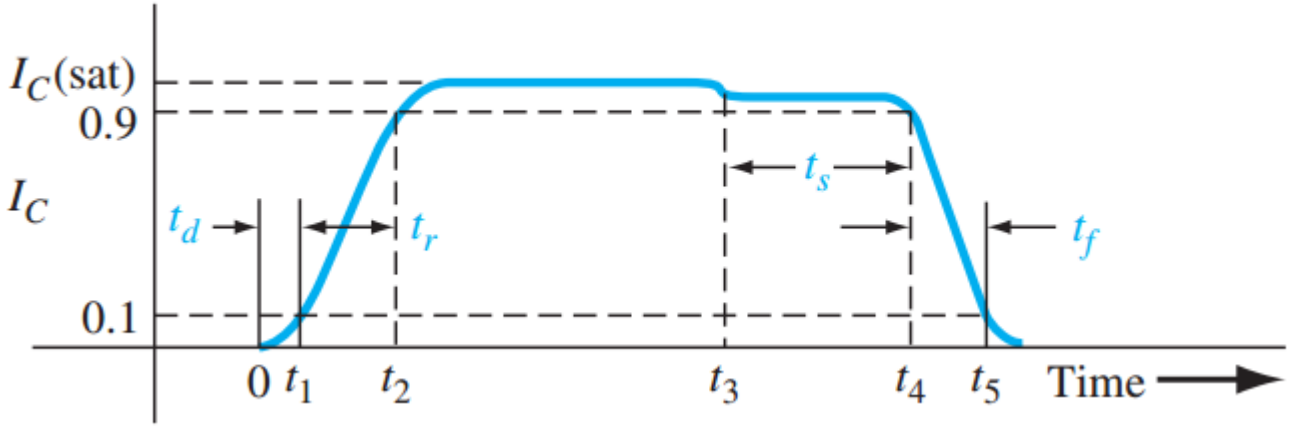

12.7.1 Switching Characteristics

- Switching from cutoff to saturation;
- *Storage time*: V_{BB} switches to the time when the collector current is reduced to 90 percent of its maximum saturation value.
- The storage time is usually the most important parameter in the switching speed of the bipolar transistor.

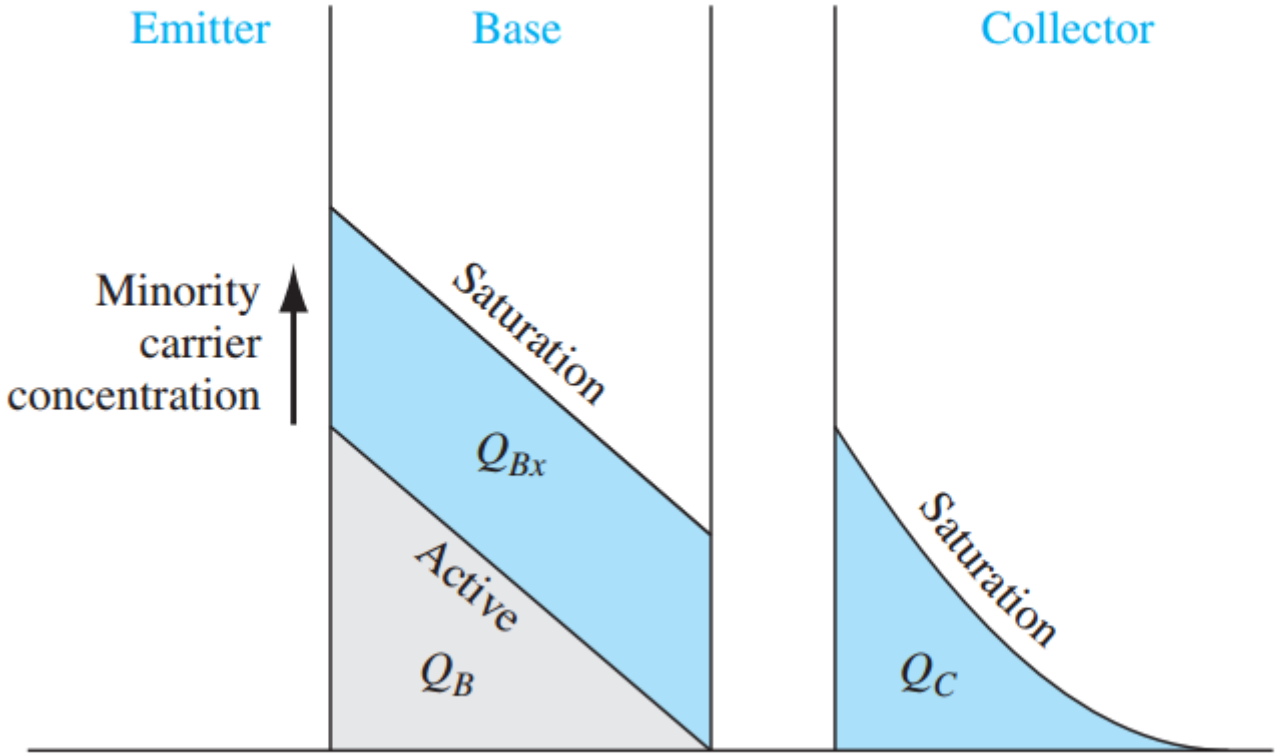

12.7.2 The Schottky-Clamped Transistor

Schottky-clamped transistor: a normal npn bipolar device with a Schottky diode connected between base and collector

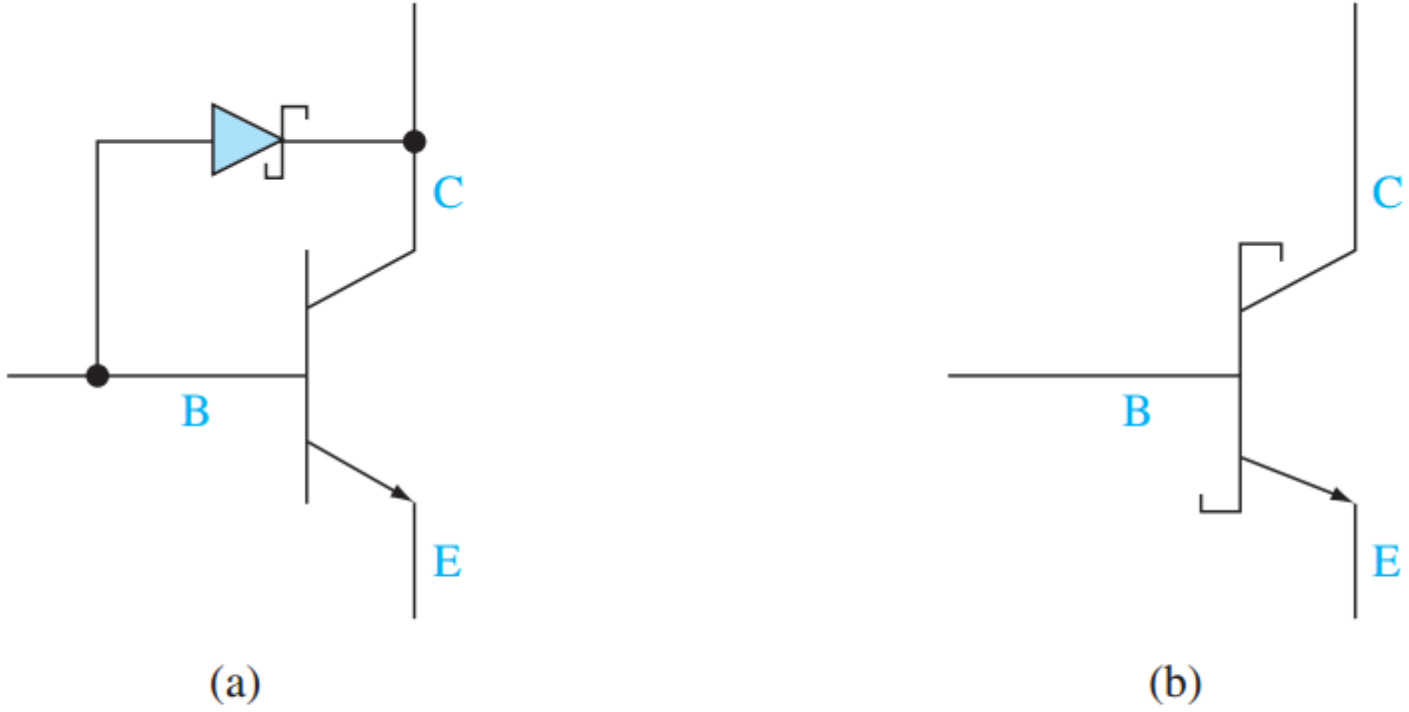

Figure 12.45 | (a) The Schottky-clamped transistor. (b) Circuit symbol of the Schottky-clamped transistor.

12.8 Heterojunction Bipolar Transistors

One of the basic limitations of the current gain in the bipolar transistor is the emitter injection effi ciency. The emitter injection efficiency γ can be increased by reducing the value of the thermal-equilibrium minority carrier concentration p_{E0} in the emitter.

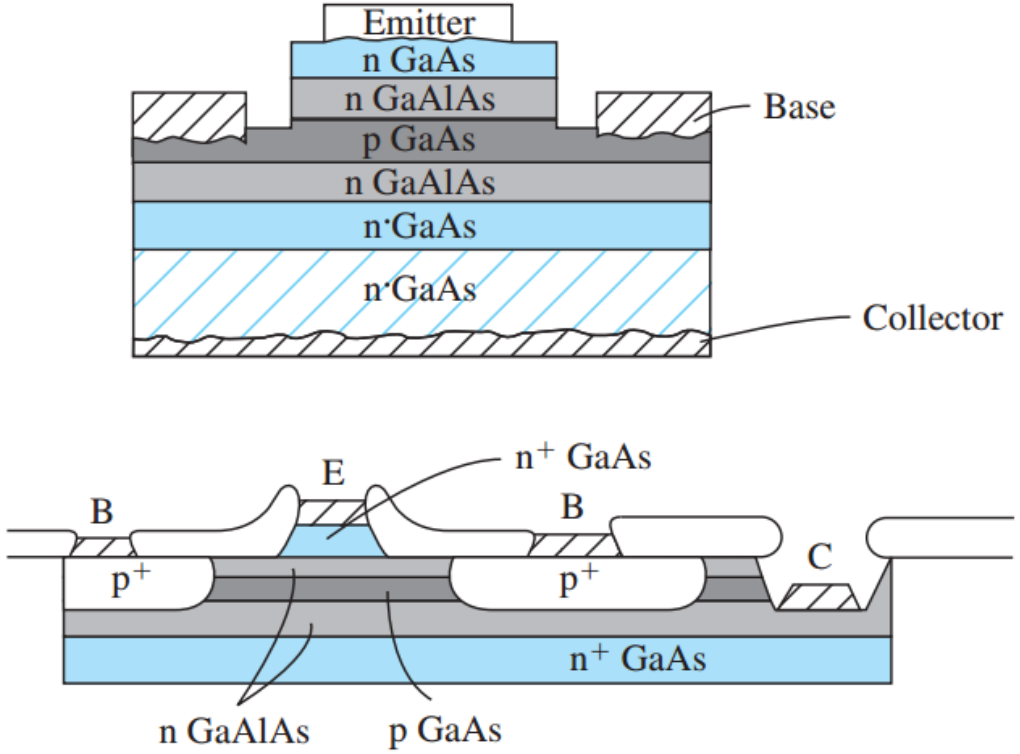

AlGaAs/ GaAs heterojunction bipolar transistor

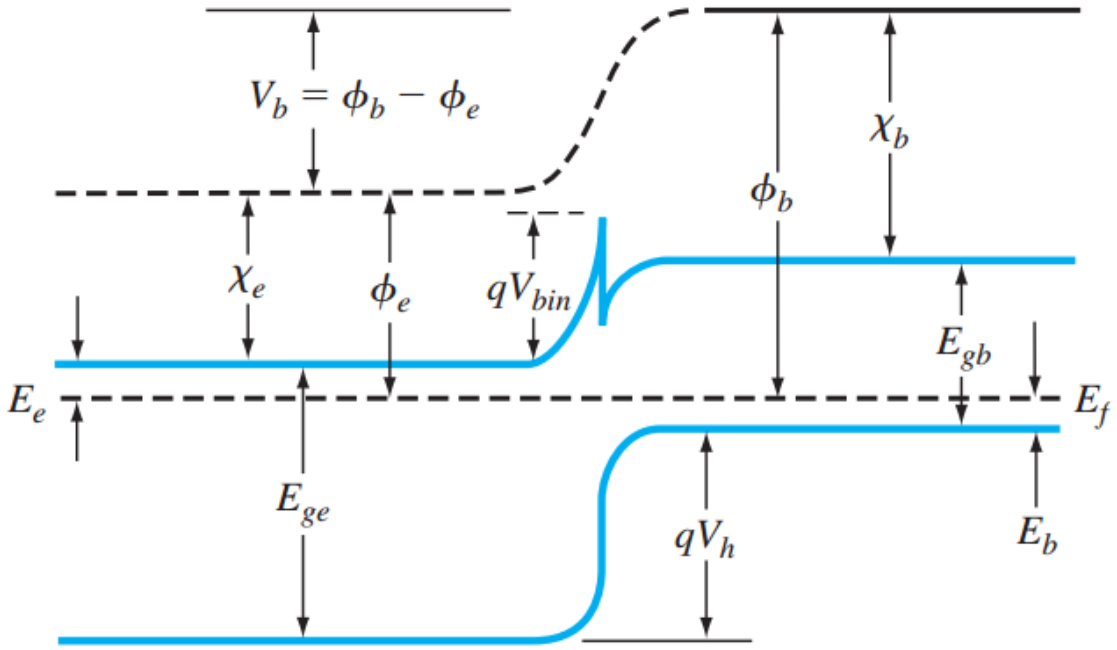

Energy-band diagram

Exercise

12.3，12.5，12.9， 12.16，12.21，12.29，12.35， 12.45，12.50，12.55